Town of Hilton Head Island
Regular Design Review Board Meeting

September 27, 2016
1:15 p.m. – Benjamin M. Racusin Council Chambers

AGENDA

As a Courtesy to Others Please Turn Off All Cell Phones and Pagers during the Meeting.

1. **Call to Order**
2. **Roll Call**
3. **Freedom of Information Act Compliance**
   Public notification of this meeting has been published, posted, and mailed in compliance with the Freedom of Information Act and the Town of Hilton Head Island requirements.
4. **Approval of Agenda**
5. **Approval of Minutes –** Meeting of September 13, 2016
6. **Staff Report**
7. **Board Business -** Approval of 2017 Regular Meeting Schedule
8. **Old Business**
9. **Unfinished Business**
10. **New Business**

    A. Alteration/Addition

    - Harbourside 1 (re-roof), DRB-001655-2016
    - Elevated Tank Rehab (Palmetto Dunes), DRB-001733-2016
    - Shelter Cove Towne Centre, DRB-001734-2016

    B. New Development – Final

    - Westin Hotel – Pavilion Redevelopment, DRB-001766-2016

11. **Appearance by Citizens**
12. **Adjournment**

Town of Hilton Head Island

Minutes of the Design Review Board

Benjamin M. Racusin Council Chambers
September 13, 2016
1:15p.m.

Board Members Present: Chairman Jake Gartner, Vice Chairman Dale Strecker, Debbie Remke, Brian Witmer, Ron Hoffman, Michael Gentemann

Board Members Absent: Kyle Theodore (excused)

Town Council Present: None

Town Staff Present: Jennifer Ray, Urban Designer
Sally Krebs, Sustainable Practices Coordinator
Teresa Haley, Secretary

As a Courtesy to Others Please Turn Off All Cell Phones and Pagers during the Meeting

---

1. **Call to Order**

   Chairman Gartner called to order the regular meeting of the Design Review Board at **1:15pm.**

2. **Roll Call - See as noted above.**

3. **Freedom of Information Act Compliance**

   The Town has met all Freedom of Information Act requirements for this meeting.

4. **Approval of the Agenda**

   The Board **approved** the agenda by general consent.

5. **Approval of Minutes**

   The Board reviewed the minutes of the **August 23, 2016** meeting and **approved** the minutes by general consent.

6. **Staff Report**

   Ms. Ray stated that Board Training regarding Native Plants will follow today's meeting.

7. **Board Business –** None

8. **Old Business –** None

9. **Unfinished Business** – None

DRAFT

10. New Business

A. Alteration/Addition

- Marriott at Monarch (re-paint), DRB-001604-2016

Ms. Ray introduced the project and stated its location: 91 North Sea Pines Drive. The applicant proposes to repaint all of the existing buildings in two shades of brown (SW 7527 "Nantucket Dune" & SW 7513 "Sanderling") that are keeping with the Design Guide. The Sea Pines Plantation ARB has reviewed and approved the submittal. Ms. Ray presented an in-depth description of the project as provided in the Board's packet. Staff recommends approval as submitted.

Chairman Gartner asked the applicant to come forward. The applicant introduced himself and answered questions by the Board.

Chairman Gartner requested comments from the Board. The Board complimented the project. The Board inquired as to the proposed color of the roof. The applicant clarified the roof color will be SW 7513 "Sanderling".

Ms. Remke made a motion to **approve** DRB-001604-2016 as submitted. Mr. Gentemann **seconded** the motion. The motion **passed** with a vote of 6-0-0.

- Lighthouse I Villas, DRB-001632-2016

Ms. Ray introduced the project and stated its location: 51 Lighthouse Lane. The applicant proposes to revise the concrete arches on the center rear elevation of the building by "squaring off" the precast arches in the center portion only. Remaining arches will be squared off at future date as repairs become necessary. The Sea Pines Plantation ARB has reviewed and approved the submittal. Ms. Ray presented an in-depth description of the project as provided in the Board's packet. Staff recommends approval as submitted.

Ms. Ray stated that the applicant was not present, but she would be happy to answer any questions from the Board.

Chairman Gartner requested comments from the Board. The Board stated a preference for repairing all of the arches at the same time, however, understands the purpose of performing repairs as necessary. Ms. Ray pointed out that arches are on the front side of the building, so the arches will be a detail that will still exist on the building. The Board asked as to the ownership of the villas. Ms. Ray indicated these are privately owned condominiums and the unit owner requested the repairs.

Mr. Hoffman made a motion to **approve** DRB-001632-2016 as submitted. Vice Chairman Strecker **seconded** the motion. The motion **passed** with a vote of 6-0-0.

- Fresh Market Shoppes (re-paint), DRB-001653-2016

Ms. Ray introduced the project and stated its location: 890 William Hilton Parkway. The applicant proposes to repaint existing buildings with a new color scheme on the front elevation that will include colors that are in keeping with the Design Guide including muted greys, green metal, and cream trim and accents. Ms. Ray presented an in-depth description of the project as provided in the Board's packet. Staff recommends approval with the following

condition: 1) new paint scheme should include side elevations as well as rear elevation. Since the Board's packet was provided, the applicant has agreed to continue the proposed color palette to the side elevations.

Chairman Gartner asked the applicant to come forward. The applicant stated that the rear elevation was mistakenly left out of the application, however, the color palette will continue on the rear elevation. The materials on the rear will be EIFS.

Chairman Gartner requested comments from the Board. The Board complimented the project. The Board agreed that all four sides of the buildings need to be addressed. The Board asked if the three monument signs at the road, as well as the plaques that display the names of the retail shops would be repainted. The applicant confirmed that all of these would be repainted. The Board asked for clarification regarding the existing metal roof, downspouts, and gutters to remain the same color. The applicant confirmed that it is green.

Mr. Gentemann made a motion to **approve** DRB-001653-2016 with the following condition: 1) all four sides of the buildings are addressed in the repaint. Ms. Remke **seconded** the motion. The motion **passed** with a vote of 6-0-0.

B. Sign

- Hilton Grand Vacations, DRB-001636-2016

Ms. Ray introduced the project and stated its location: 41 South Forest Beach. The applicant proposes to install a freestanding sign at the Ocean Oak Resort complex along with the Carolina Beach Club. The design of the sign including colors and materials is in keeping with the context of the associated buildings as well as the Design Guide. The site plan and landscaping were approved as part of the overall DRB submittal. The Forest Beach Owners Association ARB has reviewed and approved the submittal. Ms. Ray presented an in-depth description of the project as provided in the Board's packet. Since the Board's packet was provided, Staff has further reviewed the project and recommends approval with the following conditions: 1) reduce the contrast between the copy logo and the background colors, recommending SW 7029 "Agreeable Gray" for the lettering and SW 7046 "Anonymous" for the background; 2) that the address numbers and letters be a minimum of 4 inches tall; 3) consider using the cap that matches the column cap at the entrance rather than the pre-cast cap that is used elsewhere on site.

Chairman Gartner asked the applicant to come forward. The applicant introduced himself. The applicant stated that he agrees with Staff comments and further answered questions by the Board.

Chairman Gartner requested comments from the Board. The Board agreed with Staff comments. The Board and the applicant discussed the importance of the sign relating to the columns, specifically the column caps. The Board agreed upon a three piece brick cap. The Board inquired as to the height of both the column and sign and the brick cap being the same brick as used for the column. The Board expressed concern for the previously approved landscape plan potentially blocking the sign and how to prevent this possibility.

Mr. Gentemann made a motion to **approve** DRB-001636-2016 with the following conditions: 1) the letters will be SW 7029 "Agreeable Gray"; 2) the background will be SW 7046 "Anonymous"; 3) in lieu of cast stone cap provide a brick detail, a three course brick cap to

match the existing approved columns; 4) the address letters are to be 4 inch minimum as required by the sign ordinance; 5) ensure the landscape does not interfere with the lower sign; 6) shifts in landscapes may be made at Staff discretion and review; and 7) verify all heights and square footages fit within the sign ordinance. Mr. Witmer **seconded** the motion. The motion **passed** with a vote of 6-0-0.

11. Appearances by Citizens – None

12. Adjournment

Chairman Gartner adjourned the meeting at 1:50p.m.

Submitted by:	Approved by:
_____	_____
Teresa Haley, Secretary	Jake Gartner, Chairman

DRAFT

TOWN OF HILTON HEAD ISLAND

DESIGN REVIEW BOARD

2017 REGULAR MEETING SCHEDULE

DRB Powers and Duties	Application Procedures
The Design Review Board has the following powers: A. To review applications for certain sign permits and major corridor Development Reviews; B. To periodically review and recommend for adoption such amendments to the Land Management Ordinance as it may deem appropriate. C. To review and decide appeals on ***Official*** decisions on Sign Permits and Minor Corridor Permits.	All applications must be completed and submitted not later than **4:30pm** 14 days prior to the meeting date at which the application will be reviewed. An Application Check-In Conference is recommended for all applications to determine whether the application meets the minimum requirements for acceptance. Application Check-In Conferences must be scheduled by appointment with the Community Development Department staff.

MEETING DATES:	APPLICATION DEADLINES:
January 10, 2017	December 27, 2016
January 24, 2017	January 10, 2017
February 14, 2017	January 31, 2017
February 28, 2017	February 14, 2017
March 14, 2017	February 28, 2017
March 28, 2017	March 14, 2017
*April 25, 2017	April 11, 2017
May 9, 2017	April 25, 2017
May 23, 2017	May 9, 2017
June 13, 2017	May 30, 2017
June 27, 2017	June 13, 2017
July 11, 2017	June 27, 2017
July 25, 2017	July 11, 2017
August 8, 2017	July 25, 2017
August 22, 2017	August 8, 2017
September 12, 2017	August 29, 2017
September 26, 2017	September 12, 2017
October 10, 2017	September 26, 2017
October 24, 2017	October 10, 2017
November 14, 2017	October 31, 2017
November 28, 2017	November 14, 2017
* December 12, 2017	November 28, 2017

* *April has only one meeting due to the RBC Heritage.*
* *December has only one meeting due to the Holiday.*

All meetings are held in Council Chambers at 1:15p.m on the **second** & **fourth** Tuesdays of each month.

Town Government Center ♦ Community Development Department ♦ Building C
One Town Center Court ♦ Hilton Head Island ♦ South Carolina ♦ 29928
843-341-4757 ♦ (FAX) 843-842-8908

Town of Hilton Head Island

Community Development Department
One Town Center Court
Hilton Head Island, SC 29928
Phone: 843-341-4757 Fax: 843-842-8908
www.hiltonheadislandsc.gov

FOR OFFICIAL USE ONLY
Date Received:
Accepted by:
DRB #:
Meeting Date:

Applicant/Agent Name: Justin Kincaid Company: Howe Contracting, LLC
Mailing Address: PO Box 1478 City: Ft. Mill State: SC Zip: 29716
Telephone: 704-202-2305 Fax: 803-548-5965 E-mail: justin@howeroofs.com
Project Name: Harbourside 1+2 Project Address: 15 Harbourside Ln.
Parcel Number [PIN]: R___ ___ ___ ____ ____
Zoning District: _____ Overlay District(s): _____

CORRIDOR REVIEW, MAJOR
DESIGN REVIEW BOARD (DRB) SUBMITTAL REQUIREMENTS

Digital Submissions may be accepted via e-mail by calling 843-341-4757.

Project Category:

___ Concept Approval – Proposed Development
___ Final Approval – Proposed Development
✓ Alteration/Addition
___ Sign

Submittal Requirements for ***All*** projects:

___ Private Architectural Review Board (ARB) Notice of Action (if applicable): When a project is within the jurisdiction of an ARB, the applicant shall submit such ARB's written notice of action per LMO Section 16-2-103.I.4.b.iii.01. Submitting an application to the ARB to meet this requirement is the responsibility of the applicant.

✓ Filing Fee: Concept Approval-Proposed Development $175, Final Approval – Proposed Development, Alterations/Additions $100, Signs $25; cash or check made payable to the Town of Hilton Head Island.

Additional Submittal Requirements:

Concept Approval – Proposed Development

___ A survey (1"=30' minimum scale) of property lines, existing topography and the location of trees meeting the tree protection regulations of Sec. 16-6-104.C.2, and if applicable, location of bordering streets, marshes and beaches.
___ A site analysis study to include specimen trees, access, significant topography, wetlands, buffers, setbacks, views, orientation and other site features that may influence design.
___ A draft written narrative describing the design intent of the project, its goals and objectives and how it reflects the site analysis results.
___ Context photographs of neighboring uses and architectural styles.
___ Conceptual site plan (to scale) showing proposed location of new structures, parking areas and landscaping.
___ Conceptual sketches of primary exterior elevations showing architectural character of the proposed development, materials, colors, shadow lines and landscaping.

Additional Submittal Requirements:

Final Approval – Proposed Development

_____ A final written narrative describing how the project conforms with the conceptual approval and design review guidelines of Sec. 16-3-106.F.3.

_____ Final site development plan meeting the requirements of Appendix D: D-6.F.

_____ Final site lighting and landscaping plans meeting the requirements of Appendix D: D-6.H and D-6.I.

_____ Final floor plans and elevation drawings (1/8"=1'-0" minimum scale) showing exterior building materials and colors with architectural sections and details to adequately describe the project.

_____ A color board (11"x17" maximum) containing actual color samples of all exterior finishes, keyed to the elevations, and indicating the manufacturer's name and color designation.

_____ Any additional information requested by the Design Review Board at the time of concept approval, such as scale model or color renderings, that the Board finds necessary in order to act on a final application.

Additional Submittal Requirements:

Alterations/Additions

_____ All of the materials required for final approval of proposed development as listed above, plus the following additional materials.

_____ A survey (1"=30' minimum scale) of property lines, existing topography and the location of trees meeting the tree protection regulations of Sec. 16-6-104.C.2, and if applicable, location of bordering streets, marshes and beaches.

_____ Photographs of existing structure.

Additional Submittal Requirements:

Signs

_____ Accurate color rendering of sign showing dimensions, type of lettering, materials and actual color samples.

For freestanding signs:

_____ Site plan (1"=30' minimum scale) showing location of sign in relation to buildings, parking, existing signs, and property lines.

_____ Proposed landscaping plan.

For wall signs:

_____ Photograph or drawing of the building depicting the proposed location of the sign.

_____ Location, fixture type, and wattage of any proposed lighting.

Note: All application items must be received by the deadline date in order to be reviewed by the DRB per LMO Appendix D: D-23.

A representative for each agenda item is strongly encouraged to attend the meeting.

Are there recorded private covenants and/or restrictions that are contrary to, conflict with, or prohibit the proposed request? If yes, a copy of the private covenants and/or restrictions must be submitted with this application. ☐YES ☑NO

To the best of my knowledge, the information on this application and all additional documentation is true, factual, and complete. I hereby agree to abide by all conditions of any approvals granted by the Town of Hilton Head Island. I understand that such conditions shall apply to the subject property only and are a right or obligation transferable by sale.

I further understand that in the event of a State of Emergency due to a Disaster, the review and approval times set forth in the Land Management Ordinance may be suspended.

SIGNATURE Justin Kincaid

DATE 5/4/16

Howe Contracting, LLC
155 Short Cut Rd.
Ridgeland, SC 29936
Phone: (912) 577-1111
Fax: (912) 988 - 1365

August 17, 2016

Town of Hilton Head Island
One Town Center Court
Hilton Head Island, SC 29928

Attention: Mrs. Jennifer Ray

Reference: Harbourside 1
Shelter Cove
15 Harbourside Ln.
Hilton Head Island, SC 29928
Buildings *1*

Dear Mr. Jennifer Ray:

Per our discussion, we are submitting the Shelter Cove Harbourside Building #1 reroof project for the Town of Hilton Head Island DRB Review. This project consists of a new Thermoplastic Roof System (White) at all flat roof areas. The Existing Sloped Tile Roof System will be torn off and replaced with a new .032 Aluminum Standing Seam Roof System (Terra Cotta). The finished scope of work will exactly match the system already installed by others at Harbourside #3. Howe Contracting, LLC has included a complete scope of work for these new roof systems in the submittal.

<u>Firestone Thermoplastic Tapered Reroof System (Buildings *1* & *2*)</u>

1. Set up proper safety equipment as required by OSHA for this project.

2. Completely remove all layers existing roof systems down to the existing metal decking.

3. Howe Contracting, LLC will attempt to remove reuse all clay tiles associated with the flat roof areas only. Any tiles damaged during this process will be billed at an additional cost to the owner.

4. Howe Contracting, LLC will attempt to salvage and reuse all existing metal counter flashing

5. Inspect decking and repair as needed.
   Note: Unit costs are available for metal decking repair in the unforeseen condition unit cost section of this proposal.

6. Install new retrofit drain assemblies at all drain locations on the flat roof areas.

7. Replace deteriorated equipment stands as needed.
   Note: Unit costs are available for 4 leg metal equipment stand replacement.

8. Install new scupper inserts at all flat roof scupper locations.

9. Mechanically attach a new 1/8'' tapered insulation layout with a 2'' minimum thickness sloping to the middle drains, and ¼'' tapered crickets between all existing drain details on the roof area.

10. All insulation fastening patterns will be in accordance with wind uplift requirements for the geographical area of the project.

11. Install .060 **Fully Adhered** Thermoplastic Roofing membrane over the new insulation board down thru the new insulation board, and the existing metal deck.
    Note: Each of the seams in this roofing system will be heat welded; creating a stronger bond than other single-ply systems.

12. Install all flashings in strict accordance with the manufacture's specifications set for this Firestone Thermoplastic Roof System.

13. Remove all debris from the job site.

14. Provide a (5) year workmanship warranty on all details installed by provide by Howe Contracting, LLC.

15. Provide a (20) twenty year manufacturer's material warranty on a new .060 syste

35 Year Howe Roofs Snap Lock Standing Seam Metal Roof System (Aluminum)

1. Remove all existing clay tile roofing material from roof surface and dispose of all debris in a proper manner
2. Clean all large debris from grounds daily to provide safe job site after working hours
3. Upon removal of deteriorated decking Howe Contracting, LLC will inspect and properly refit all vent pipe details in the dead air space under the decking.
4. Replace any rotted wood roof decking as determined necessary by roofer and or supervisor **(note/ unite cost)**
5. Install a new locking drip edge detail around the entire perimeter of the roof
6. Install new roof to wall stucco flashing at all existing metal to vertical stucco elevation locations. **(note/ unite cost)**
7. Apply ice and water shield at all valley locations
8. Apply one layer of Synthetic felt underlayment on entire roof surface
9. Install new plumbing vent flashings at all sewer stacks
10. Apply new .032 Aluminum Snap Lock Standing Seam Metal roof system in accordance with SMACNA specifications.
11. Install new flashings and counter flashings and z- loser where siding or stucco details meet the roof surface
12. Install new v-crimp valley details with z-closer at all valley locations
13. Install new roof top ridge vent with z-closer detail at all ridge lines
14. Install new hip cap with z-closer at all hip locations
15. Provide 3 year workmanship warranty if the Synthetic Felt underlayment option is selected.
16. Provide 35 year manufacturer’s material finish warranty on the new Standing Seam Roofing System
17. Perform a 15-point final inspection of installation and clean up after job is complete

Atlantic States Management, INC

September 2, 1016

To Whom it May Concern:

The Harbourside I & II Board of Directors has authorized the removal of the tile roof at Harbourside I to be replaced with a metal roof to match the new roof recently installed at Harbourside III.

Thank you,

Stacy Kaeding
Property Manager

4 Pensacola Place Suite B | Hilton Head Island, SC 29928
P.O. Box 7431 | Hilton Head Island, SC 29938
Phone: (843) 785-3278 | Fax: (843) 785-3381

SHELTER COVE COMPANY
PO Box 6004
Hilton Head Island, SC 29938

September 16, 2016

Mr. Justin Kincaid
Howe Roofs
PO Box 1478
Fort Mill, SC 29716

Delivered via email

RE: Harbourside 1 Roofing Project

Dear Justin,

The Shelter Cove Company's ARB is in receipt of the proposal package for the re-roofing project for Harbourside 1.

The ARB has reviewed and approved the plan package as submitted with the following conditions:

1. The standing seam metal roofing material used on the building shall be the "terra cotta" color.
2. The construction staging and lay down area shall be identified on a site plan and submitted. All construction activity shall be confined to the said area. Proposed activity shall include, but not limited to, contractor and subcontractor parking, temporary office and storage structures, material and equipment storage etc. At no time shall any staging of lay down activity relating to this project be outside of the area proposed. Staging and lay down area shall be reviewed in the field and approved prior to the start of the project.
3. All exterior first floor walkways shall remain open and free of any obstacles during the entire project at all times and protected to ensure the safety of owners, invitees, guest and contractor.
4. Construction fencing shall be used around all construction activity and equipment taking place around the perimeter of the building.
5. All common surface areas where equipment will be placed or traversed shall utilize weight protection methods in order eliminate damage to said areas.
6. All Shelter Cove property that will have construction activity occurring on it, if damaged, shall be restored to the pre-construction condition at the contractor's sole expense.
7. Finally, at $15,000 compliance deposit will be required before the project may commence.

Please notify the SCC office at (843) 310-0431 or by email at jbetts@sheltercovehc.org should you have any questions.

With Kindest Regards,

John P. Betts
Manager

Cc: Mr. Scott Foster, Chairman
SCCARB Committee
Stacy Keading, Atlantic States Management

Taffeta

Taffeta

DESIGN TEAM/DRB COMMENT SHEET

The comments below are staff recommendations to the Design Review Board (DRB) and do NOT constitute DRB approval or denial.

PROJECT NAME: Harbourside 1 & 2 (re-roof) –ALTERATION/ADDITION DRB#: DRB-001655-2016

DATE: September 23, 2016

RECOMMENDATION: Approval ☒ Approval with Conditions ☐ Denial ☐
RECOMMENDED CONDITIONS:

Applicant proposes to replace the existing concrete tiles roof at Harbourside 1 & 2 with metal roof in "Terra Cotta" to be consistent with the previously approved Harbourside 3 re-roof.

Project has been approved by the Shelter Cove Company ARB and the Harbourside 1 & 2 Board of Directors.

Town of Hilton Head Island

Community Development Department
One Town Center Court
Hilton Head Island, SC 29928
Phone: 843-341-4757 Fax: 843-842-8908
www.hiltonheadislandsc.gov

FOR OFFICIAL USE ONLY
Date Received _____
Accepted by _____
DRB # _____
Meeting Date _____

Applicant/Agent Name: Mike Allen Company: Broad Creek PSD
Mailing Address: 3 Marina Side Dr. City: Hilton Head State: SC Zip: 29928
Telephone: 843-785-7582 Fax: 843-785-8196 E-mail: mallen@bcpsd.com
Project Name: Elevated Tank Rehab Project Address: 14 Queen's Folly Road
Parcel Number [PIN]: R___ ___ ___ ___ ___ ___
Zoning District: _____ Overlay District(s): Corridor

CORRIDOR REVIEW, MAJOR
DESIGN REVIEW BOARD (DRB) SUBMITTAL REQUIREMENTS

Digital Submissions may be accepted via e-mail by calling 843-341-4757.

Project Category:

_____ Concept Approval – Proposed Development
_____ Final Approval – Proposed Development
X Alteration/Addition
_____ Sign

Submittal Requirements for ***All*** projects:

✓ Private Architectural Review Board (ARB) Notice of Action (if applicable): When a project is within the jurisdiction of an ARB, the applicant shall submit such ARB's written notice of action per LMO Section 16-2-103.I.4.b.iii.01. Submitting an application to the ARB to meet this requirement is the responsibility of the applicant.

N/A Filing Fee: Concept Approval-Proposed Development $175, Final Approval – Proposed Development $175, Alterations/Additions $100, Signs $25; cash or check made payable to the Town of Hilton Head Island.

Additional Submittal Requirements:

Concept Approval – Proposed Development

_____ A survey (1"=30' minimum scale) of property lines, existing topography and the location of trees meeting the tree protection regulations of Sec. 16-6-104.C.2, and if applicable, location of bordering streets, marshes and beaches.
_____ A site analysis study to include specimen trees, access, significant topography, wetlands, buffers, setbacks, views, orientation and other site features that may influence design.
_____ A draft written narrative describing the design intent of the project, its goals and objectives and how it reflects the site analysis results.
_____ Context photographs of neighboring uses and architectural styles.
_____ Conceptual site plan (to scale) showing proposed location of new structures, parking areas and landscaping.
_____ Conceptual sketches of primary exterior elevations showing architectural character of the proposed development, materials, colors, shadow lines and landscaping.

Additional Submittal Requirements:

Final Approval – Proposed Development

✓ A final written narrative describing how the project conforms with the conceptual approval and design review guidelines of Sec. 16-3-106.F.3.

✓ Final site development plan meeting the requirements of Appendix D: D-6.F.

N/A Final site lighting and landscaping plans meeting the requirements of Appendix D: D-6.H and D-6.I.

N/A Final floor plans and elevation drawings (1/8"=1'-0" minimum scale) showing exterior building materials and colors with architectural sections and details to adequately describe the project.

✓ A color board (11"x17" maximum) containing actual color samples of all exterior finishes, keyed to the elevations, and indicating the manufacturer's name and color designation.

✓ Any additional information requested by the Design Review Board at the time of concept approval, such as scale model or color renderings, that the Board finds necessary in order to act on a final application.

Additional Submittal Requirements:

Alterations/Additions

✓ All of the materials required for final approval of proposed development as listed above, plus the following additional materials.

N/A A survey (1"=30' minimum scale) of property lines, existing topography and the location of trees meeting the tree protection regulations of Sec. 16-6-104.C.2, and if applicable, location of bordering streets, marshes and beaches.

✓ Photographs of existing structure.

Additional Submittal Requirements:

Signs

_____ Accurate color rendering of sign showing dimensions, type of lettering, materials and actual color samples.

For freestanding signs:

_____ Site plan (1"=30' minimum scale) showing location of sign in relation to buildings, parking, existing signs, and property lines.

_____ Proposed landscaping plan.

For wall signs:

_____ Photograph or drawing of the building depicting the proposed location of the sign.

_____ Location, fixture type, and wattage of any proposed lighting.

Note: All application items must be received by the deadline date in order to be reviewed by the DRB per LMO Appendix D: D-23.

A representative for each agenda item is strongly encouraged to attend the meeting.

Are there recorded private covenants and/or restrictions that are contrary to, conflict with, or prohibit the proposed request? If yes, a copy of the private covenants and/or restrictions must be submitted with this application. ☐ **YES** ☒ **NO**

To the best of my knowledge, the information on this application and all additional documentation is true, factual, and complete. I hereby agree to abide by all conditions of any approvals granted by the Town of Hilton Head Island. I understand that such conditions shall apply to the subject property only and are a right or obligation transferable by sale.

I further understand that in the event of a State of Emergency due to a Disaster, the review and approval times set forth in the Land Management Ordinance may be suspended.

SIGNATURE

8-30-16

DATE

Broad Creek Public Service District

Bill Dugle, Chairman
Tom Hopkins, Commissioner
John Joseph, Commissioner
James Rowe, Commissioner

P.O. Box 5878, Hilton Head Island, South Carolina, 29938•Phone: 843-785-7582•Fax: 843-785-8196

June 9, 2016

To: Jennifer Ray, ASLA
Urban Designer
Town of Hilton Head Island

Subject: Elevated Storage Tank Repainting

Jennifer,

Currently Broad Creek Public Service District (BCPSD) owns an elevated water storage tank at 14 Queen's Folly Road which we maintain from time to time. Included in this maintenance is the repainting of this tank which occurs every 7 to 10 years. After the last inspection that we had it was noted that our tank is now due for another painting in order to further extend the life of our infrastructure. Our hope is to have this tank painted before January of 2017.

During the process of deciding what paint color we were going to use we approached the Palmetto Dunes Property Owners Association (PDPOA) and asked for the input from their Architectural Review Board (ARB). During that discussion it was mentioned that they would like to see this tank blend into the natural surroundings and still fit in with the existing color scheme for the PDPOA. With that being considered it was agreed upon to paint the tank green (PMS 560 U).

BCPSD has obtained approval from the PDPOA and now would like your approval to move forward with this project with the affor mentioned color that was approved by both BCPSD and PDPOA.

Sincerely,

Mike Allen
General Manager, BCPSD

PALMETTO DUNES
PROPERTY OWNERS ASSOCIATION
A RESIDENTIAL RESORT COMMUNITY

January 15, 2016

Town of Hilton Head Island
One Town Center Court
Hilton Head Island, SC 29928

To Whom It May Concern:

On January 15, 2016 the Palmetto Dunes Architectural Review Board approved the proposal to redesign and paint the PD water tower presented by Mike Allen, Broad Creek PSD General Manager. The color green we are recommending is **PMS 560 U**.

Yours truly,

Kate Nolan
ARB Administrator

CC: Mike Allen, Broad Creel PSD, via email

16 Queen's Folly Road | Hilton Head Island, SC 29928 | T: (843) 785-1109 | F: (843) 785-3589 | www.pdpoa.org

Broad Creek PSD Water Tower

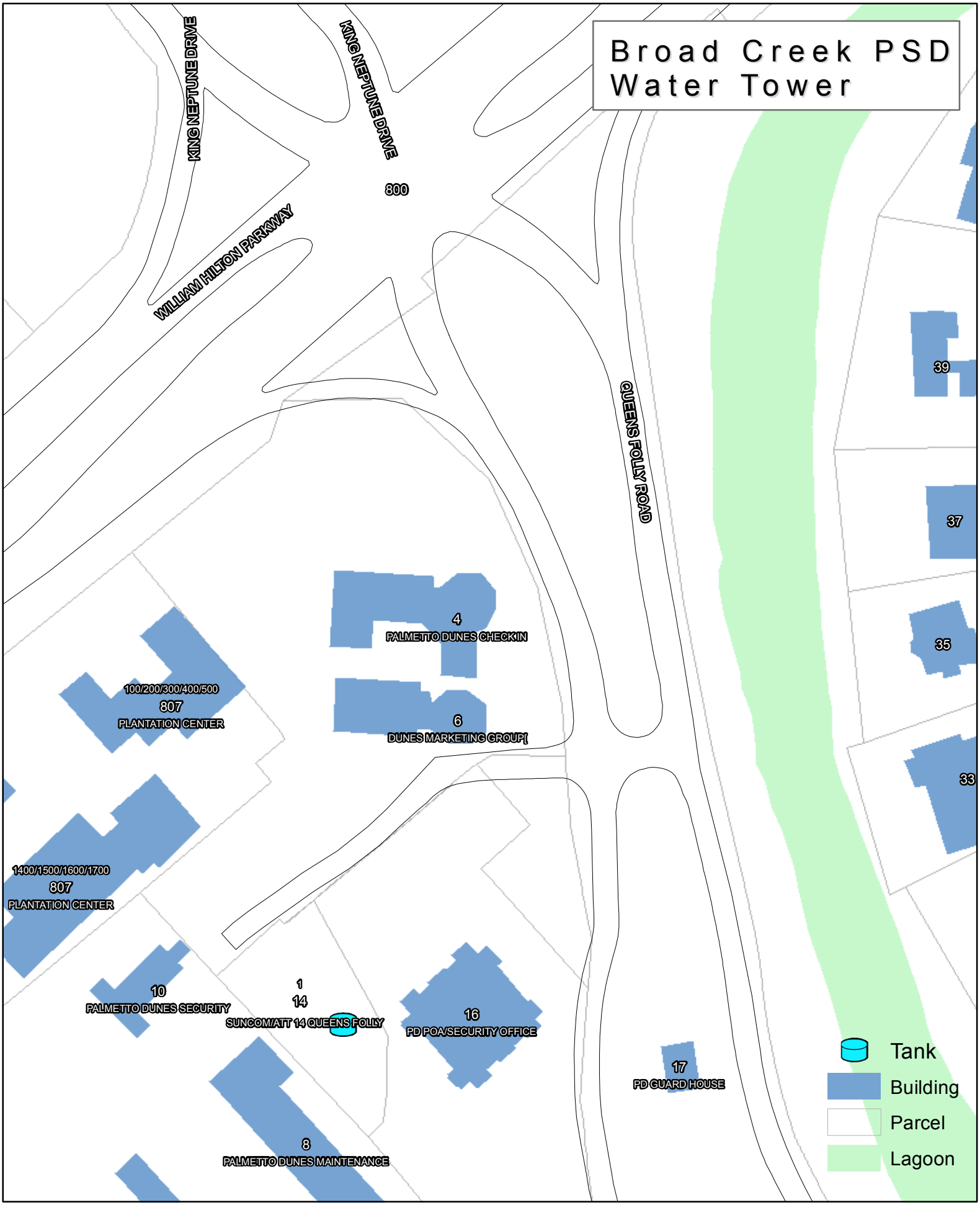

1 inch = 100 feet

N

1 inch = 100 feet

Parcel

DRAFT 1

- ✔ GREENWOOD
- ✔ ARB CHAIR
- ✔ BCPSD
- ☒ TOWN

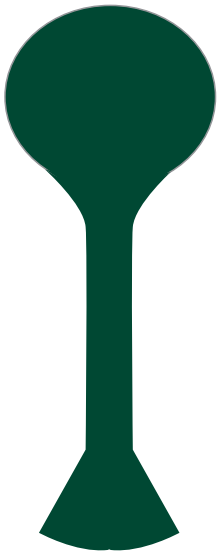

DRAFT 2

- ✔ GREENWOOD
- ☒ ARB CHAIR
- ✔ BCPSD
- ☐ TOWN

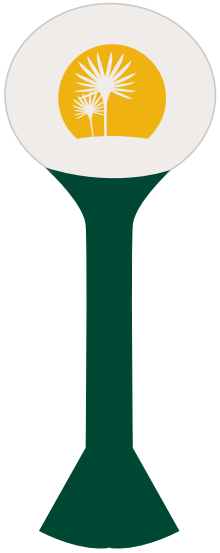

COLOR STANDARDS - PALMETTO DUNES

PANTONE SOLID COATED
PMS 124 C

PANTONE SOLID COATED
PMS 541 C

PANTONE SOLID UNCOATED
WARM GREY 1 U

PANTONE SOLID UNCOATED
PMS 560 U

DRAFT 3

- ✔ GREENWOOD
- ✔ ARB CHAIR
- ✔ BCPSD
- ☐ TOWN

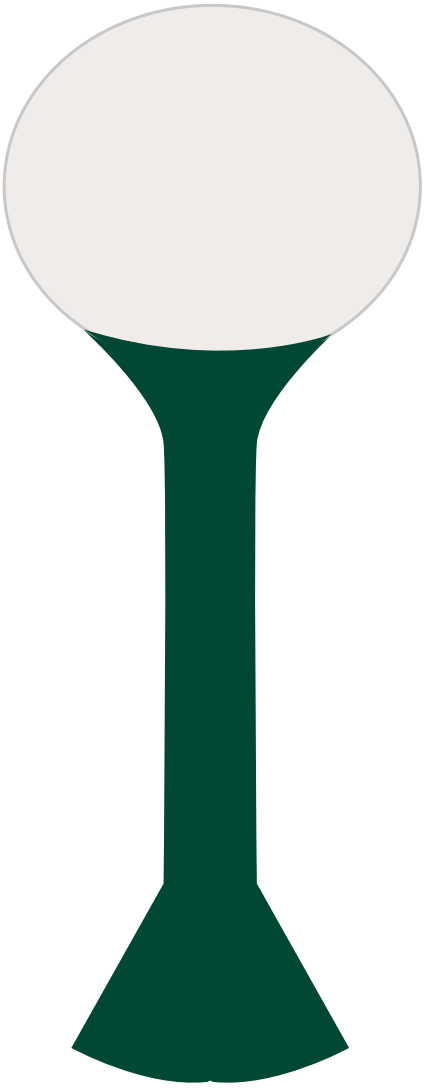

COLOR STANDARDS - PALMETTO DUNES

PANTONE SOLID COATED
PMS 124 C

PANTONE SOLID COATED
PMS 541 C

PANTONE SOLID UNCOATED
WARM GREY 1 U

PANTONE SOLID UNCOATED
PMS 560 U

DRAFT 5

- ✔ GREENWOOD
- ✔ ARB CHAIR
- ☒ BCPSD
- ☐ TOWN

COLOR STANDARDS - PALMETTO DUNES

PANTONE SOLID COATED
PMS 124 C

PANTONE SOLID COATED
PMS 541 C

PANTONE SOLID UNCOATED
WARM GREY 1 U

PANTONE SOLID UNCOATED
PMS 560 U

DESIGN TEAM/DRB COMMENT SHEET

The comments below are staff recommendations to the Design Review Board (DRB) and do NOT constitute DRB approval or denial.

PROJECT NAME: Elevated Tank Rehab (Palmetto Dunes) – ALTERATION/ ADDITION

DRB#: DRB-001733-2016

DATE: September 23, 2016

RECOMMENDATION: Approval ☐ Approval with Conditions ☒ Denial ☐

RECOMMENDED CONDITIONS:

1. Paint the top of the tank and the shaft light blue or light grey and paint the flared base dark green.

The applicant proposes to repaint the existing elevated tank for maintenance purposes. During the previous DRB review the Board stated that they would not approve the solid green tank and recommended the PSD consider alternate solutions such as monochromatic schemes in a blue color that would be more nature blending with the sky rather than green to blend with existing trees.

Town of Hilton Head Island

Community Development Department
One Town Center Court
Hilton Head Island, SC 29928
Phone: 843-341-4757 Fax: 843-842-8908
www.hiltonheadislandsc.gov

FOR OFFICIAL USE ONLY
Date Received: _____
Accepted by: _____
DRB #: _____
Meeting Date: _____

Applicant/Agent Name: Timothy Probst Company: Parker Design Group Architects
Mailing Address: 10 Palmetto Business Park City: Hilton Head State: SC Zip: 29928
Telephone: 843-785-5171 Fax: _____ E-mail: tprobst@hargray.com
Project Name: Shelter Cove Towne Center Project Address: same
Parcel Number [PIN]: R 5 2 0 0 1 2 0 0 B 0 0 2 6 0 0 0 0
Zoning District: _____ Overlay District(s): _____

CORRIDOR REVIEW, MAJOR
DESIGN REVIEW BOARD (DRB) SUBMITTAL REQUIREMENTS

Digital Submissions may be accepted via e-mail by calling 843-341-4757.

Project Category:

_____ Concept Approval – Proposed Development
_____ Final Approval – Proposed Development
__x__ Alteration/Addition
_____ Sign

Submittal Requirements for ***All*** projects:

_____ Private Architectural Review Board (ARB) Notice of Action (if applicable): When a project is within the jurisdiction of an ARB, the applicant shall submit such ARB's written notice of action per LMO Section 16-2-103.I.4.b.iii.01. Submitting an application to the ARB to meet this requirement is the responsibility of the applicant.

_____ Filing Fee: Concept Approval-Proposed Development $175, Final Approval – Proposed Development $175, Alterations/Additions $100, Signs $25; cash or check made payable to the Town of Hilton Head Island.

Additional Submittal Requirements:

Concept Approval – Proposed Development

_____ A survey (1"=30' minimum scale) of property lines, existing topography and the location of trees meeting the tree protection regulations of Sec. 16-6-104.C.2, and if applicable, location of bordering streets, marshes and beaches.
_____ A site analysis study to include specimen trees, access, significant topography, wetlands, buffers, setbacks, views, orientation and other site features that may influence design.
_____ A draft written narrative describing the design intent of the project, its goals and objectives and how it reflects the site analysis results.
_____ Context photographs of neighboring uses and architectural styles.
_____ Conceptual site plan (to scale) showing proposed location of new structures, parking areas and landscaping.
_____ Conceptual sketches of primary exterior elevations showing architectural character of the proposed development, materials, colors, shadow lines and landscaping.

Additional Submittal Requirements:

Final Approval – Proposed Development

__x__ A final written narrative describing how the project conforms with the conceptual approval and design review guidelines of Sec. 16-3-106.F.3.

__x__ Final site development plan meeting the requirements of Appendix D: D-6.F.

__x__ Final site lighting and landscaping plans meeting the requirements of Appendix D: D-6.H and D-6.I.

__x__ Final floor plans and elevation drawings (1/8"=1'-0" minimum scale) showing exterior building materials and colors with architectural sections and details to adequately describe the project.

__x__ A color board (11"x17" maximum) containing actual color samples of all exterior finishes, keyed to the elevations, and indicating the manufacturer's name and color designation.

_____ Any additional information requested by the Design Review Board at the time of concept approval, such as scale model or color renderings, that the Board finds necessary in order to act on a final application.

Additional Submittal Requirements:

Alterations/Additions

__x__ All of the materials required for final approval of proposed development as listed above, plus the following additional materials.

__x__ A survey (1"=30' minimum scale) of property lines, existing topography and the location of trees meeting the tree protection regulations of Sec. 16-6-104.C.2, and if applicable, location of bordering streets, marshes and beaches.

__x__ Photographs of existing structure.

Additional Submittal Requirements:

Signs

_____ Accurate color rendering of sign showing dimensions, type of lettering, materials and actual color samples.

For freestanding signs:

_____ Site plan (1"=30' minimum scale) showing location of sign in relation to buildings, parking, existing signs, and property lines.

_____ Proposed landscaping plan.

For wall signs:

_____ Photograph or drawing of the building depicting the proposed location of the sign.

_____ Location, fixture type, and wattage of any proposed lighting.

Note: All application items must be received by the deadline date in order to be reviewed by the DRB per LMO Appendix D: D-23.

A representative for each agenda item is strongly encouraged to attend the meeting.

Are there recorded private covenants and/or restrictions that are contrary to, conflict with, or prohibit the proposed request? If yes, a copy of the private covenants and/or restrictions must be submitted with this application. ☐YES ☒NO

To the best of my knowledge, the information on this application and all additional documentation is true, factual, and complete. I hereby agree to abide by all conditions of any approvals granted by the Town of Hilton Head Island. I understand that such conditions shall apply to the subject property only and are a right or obligation transferable by sale.

I further understand that in the event of a State of Emergency due to a Disaster, the review and approval times set forth in the Land Management Ordinance may be suspended.

SIGNATURE _____ DATE 9/9/16

parkerdesigngrouparchitects
843 785 5171 POST OFFICE BOX 5010 HILTON HEAD ISLAND SC 29938

New Shell Buildings at Shelter Cove Town Center

Spartina:

This is a 4,000 sq. ft. space that will be attached to the existing Belk Anchor Store to the left and separated from the new Tenant Spaces 1 and 2 with an outdoor corridor to the right.

The building consists of brick columns and tall windows to form a tall gallery space with a metal standing roof that runs from the front to the back. The lower space connects the building to Belk's with horizontal and board and batten siding.

Tenant Spaces 1 and 2:

This is a 4,000 sq. ft. space that will be separated from the new Spartina with an outdoor corridor to the left and attached directly attached to the new Talbots to the right.

The exterior consists of Stucco with brick bases at the columns. There is a shed metal roof at the entry to break up the mass of the front elevation.

Talbots:

This is 6,500 sq. ft. building that will be attached directly to the new Tenant Spaces 1 and 2 to the left and the new Fab'rik to the right.

The exterior consists of horizontal cement board siding, canvas canopies over the display windows, and an entry trellis roof structure.

Fab'rik:

This is a 2,100 sq. ft. building that will be attached to the new Talbots to the left.

The entry facade consists of brick with recessed storefront and cement board panels. The sides and back of the structure consist of board and batten cement board siding.

SHELTER COVE COMPANY
PO Box 6004
Hilton Head Island, SC 29938

TIMOTHY C PROBST, AIA
PARKER DESIGN GROUP
10 PALMETTO BUSINESS PARK, SUITE 201
PO BOX 5010
HILTON HEAD ISLAND, SC 29938

RE: Job # 1614 rec'd 8/30/2016

Dear Tim,
The SCARB has reviewed the plans you submitted for the Spartina, Talbots, Fab'rik and the 2 un-named units at Shelter Cove Towne Centre and has approved the plans as received.

Please let me know should you have any questions.

Regards,

John P. Betts
Manager
Shelter Cove Company

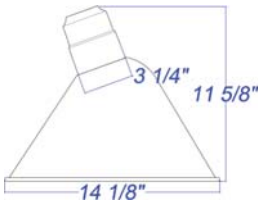

Project: _____

Customer No: _____

Fixture Type: _____

Quantity: _____

A814
14" ANGLE SHADE

RLM Shades manufactured using 1100 aluminum alloy, typically .08-.125 thickness

Catalog Logic

A814	M021LD	N	W	40K	RTC	E6	PC	41
RLM Style	Light Source & Wattage	Dimming/No Dimming	Distribution	CCT	Driver Housing	Mounting	Accessories	Finish

	1	2	3	4	5	6	7	8
A814	13W	D	W	27K		E11	CB	51

1 LIGHT SOURCE & WATTAGES

Wattage	Catalog #
GU24 Socket Option	
9w	**M009LD**
13w	**M013LD**
21w	**M00LD**

DIMMING/NO DIMMING

N (No Dimming)

D (Dimming)

S (Sunset - Dims smoothly from 2700K to 1800K)

3 DISTRIBUTION

W (T5 Wide Distribution with Dome LED Lens)

N (T5 Narrow Distribution with Flat LED Lens)

4 COLOR TEMPERATURE (CCT)

CCT	Catalog#
2700K	27K
3000K	30K
3500K	35K
4000K	40K

5 DRIVER HOUSING

RTC (Driver Canopy)

RTCNC (Driver Canopy/No Spun Cover)

6 MOUNTING SOURCES

Arm Mounts (Come Standard with CB)

E1 E2 E3 E4 E5 E6 E7

E8 E9 E10 E11 E12 E13

E15 E16 E17 E18

E18SC E19 E20 E21 E22 E23 E25 E26

Wall Mounts

WM35

WM40 (driver housing not required)

WM55

WM55SC

WM75 (driver housing not required)

WM318 (requires remote driver)

WM85 (requires remote driver)

WM85SC (requires remote driver)

WM85BP (requires remotedriver)

WM85SCBP (requires remote driver)

Post Mounts

PM10

PM20

PM30

PM40

PM50

Pendant Mounts

BLC (black cord - includes canopy and 8' cord)

WHC (white cord - includes canopy and 8' cord)

1/2" stems (Comes Standard with STC)

2ST6 2ST12 2ST18 2ST24 2ST36 2ST48 2ST60

2ST72 2ST96

3/4" stems (Comes Standard with STC)

3ST6 3ST12 3ST18 3ST24 3ST36 3ST48

3ST60 3ST72 3ST96

7 ACCESSORIES

CB (Cast back plate)

CBC (Cast back plate Spun Alum Cover)

GR14 (14" wire grill)

PC (Button Photo Cell) Remote Only

SC (Scroll for Arms)

SLC (Sloped Ceiling Mount)

SQ (Square Back Plate)

STC (Flat Ceiling Stem Canopy)

SWL (Swivel)

© 2014 ANP Lighting. All rights reserved. These specifications are intended for general purposes only.
ANP reserves the right to change material or design, without prior notice, in a continuing effort to upgrade its products.

1-800-548-3227
ANPlighting.com

Project: _____

Customer No: _____

Fixture Type: _____

Quantity: _____

8 FINISH

STANDARD			PREMIUM		
Standard	**Marine**	**Colors**	**Standard**	**Marine**	**Colors**
44	**107**	**White**	**48**		**Polished Aluminum**
77	**127**	**Textured White**	**55**		**Brushed Aluminum**
13	**132**	**Putty**	**81**	**129**	**Extreme Chrome**
56	**109**	**Silver**	**80**	**117**	**Textured Desert Stone**
78	**124**	**Textured Silver**	**67**	**119**	**Butterscotch**
49		**Painted Galvanized**	**66**	**115**	**Caramel**
70	**118**	**Painted Chrome**	**64**	**116**	**Candy Apple Red**
11	**131**	**Cantaloupe**	**65**	**122**	**Cobalt Blue**
46	**123**	**Sunny Yellow**	**82**	**128**	**Graystone**
43	**114**	**Bright Red**	**69**	**113**	**Gunmetal Gray**
10	**130**	**Aspen Green**	**68**	**126**	**Black Silver**
47	**120**	**Aqua Green**			
42	**102**	**Forest Green**			
52	**104**	**Patina Verde**			
61	**106**	**Black Verde**			
45	**112**	**Bright Blue**			
50	**111**	**Navy**			
53	**100**	**Copper Clay**			
71	**105**	**Painted Copper**			
51	**103**	**Architectural Bronze**			
76	**112**	**Textured Architectural Bronze**			
41	**101**	**Black**			
72	**108**	**Textured Black**			
73	**105**	**Matte Black**			

Consult factory for additional paint charges and availability of metal finishes.

The Colors of ANP Lighting

All of our products are painted at a TIGER Drylac® approved facility, and are finished in our polyester powder coat for exceptional durability and color retention. Products undergo an intensive five-step process in which they are cleansed, treated with iron phosphate, and sealed to pre-treat the metal surface for maximum paint adhesion. Whether applied as a textured coat or a smooth gloss, our high quality finish is electro-statically applied and baked at 430° for maximum hardness and wear. The end result is a tough, attractive, durable, scratch resistant, and cost-effective product.

Optional Marine Grade Finish

For lighting fixtures exposed to more extreme conditions, such as those found in coastal regions or industrial environments, we offer a marine grade finish that provides superior salt, humidity, and UV protection. This specialty powder coating, available for an additional charge, withstands up to 3000 hours of continuous salt spray, comes with a 5-year warranty and is available in either a textured or gloss surface. Consult with our factory for additional paint charges.

© 2014 ANP Lighting. All rights reserved. These specifications are intended for general purposes only.
ANP reserves the right to change material or design, without prior notice, in a continuing effort to upgrade its products.

Project: _____
Customer No: _____
Fixture Type: _____
Quantity: _____

MODULE SPECIFICATION:

- **Efficacy ranges from 97-108 lumens per watt**
- **Dimmable 5% - 100%**
- **Life: L70 50,000 hours**
- **Color temp: 2700K,3000K,3500K and 4000K**
- **CRI: >90**

MODULE DRIVER SPECIFICATION:

- **Operates at 440mA to 940mA**
- **Built in surge protection**
- **Constant current output 50/60HZ**
- **Driver Efficiency > 81% power factor above 90%**
- **120 – 277 volts**

MODULE LISTINGS

- **Fully compliant with the RoHS Directive**
- **Certifications: CE/UL/ETL**

WARRANTY

See terms and conditions for complete fixture warranty.

LED warranty information

- **5 year limited warranty***
- **Life: L70 -50,000 hours**
- **Ease of maintenance and future upgrades with our independent heat sink technology**

***5** year limited Warranty: LED modules will be warranted for a period of 5 years from date of installation. A typical year is defined as 4380 hours of operation. Failure defined as more than 8% of the total module not operating. The driver will also be covered under the same 5 year warranty

LED MODULE

LED Wattage	CCT	Lumens	System Wattage	Efficacy
9w	2700K	850	11w	97
9w	3000K	850	11w	97
9w	3500K	850	11w	97
9w	4000K	850	11w	97
13w	2700K	1250	16w	97
13w	3000K	1250	16w	97
13w	3500K	1250	16w	97
13w	4000K	1250	16w	97
21w	2700K	2000	25w	97
21w	3000K	2000	25w	97
21w	3500K	2000	25w	97
21w	4000K	2000	25w	97

© 2014 ANP Lighting. All rights reserved. These specifications are intended for general purposes only.
ANP reserves the right to change material or design, without prior notice, in a continuing effort to upgrade its products.

1-800-548-3227
ANPlighting.com

Project: _____
Customer No: _____
Fixture Type: _____
Quantity: _____

RLM Mounts manufactured using Schedule 40 1/2" or 3/4" IPS.

ARM MOUNTS

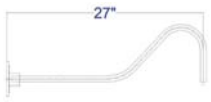

E1

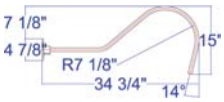

E2

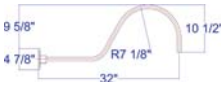

E3

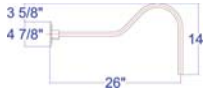

E4

E5

E6

E7

E8

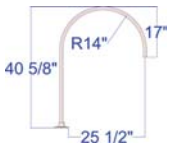

E9

E10

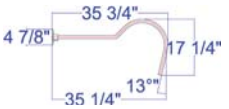

E11

E12

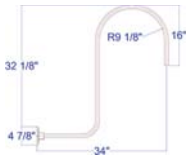

E13

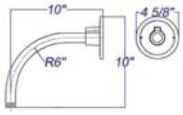

E15

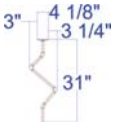

E16

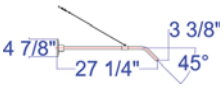

E17

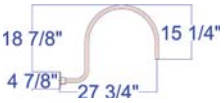

E18

E18SC

E19

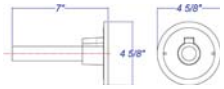

E20

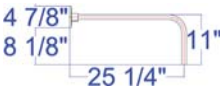

E21

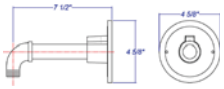

E22

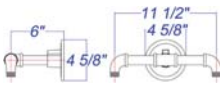

E23

E25

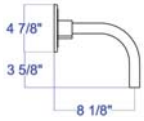

E26

WALL MOUNTS

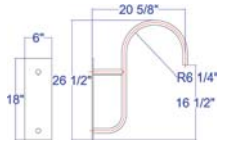

WM35

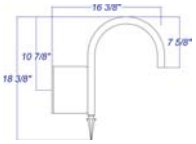

WM40

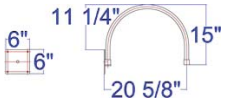

WM55

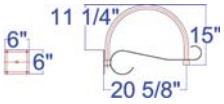

WM55SC

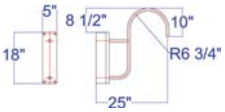

WM75

WM318

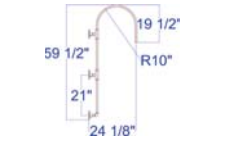

WM85

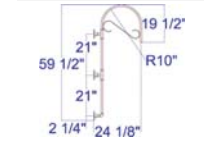

WM85SC

POST MOUNTS

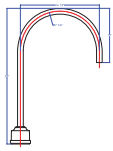
PM10

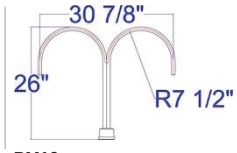

PM10

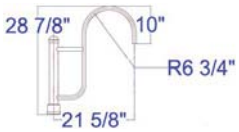

PM30

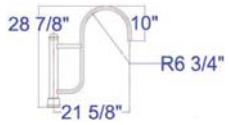

PM40

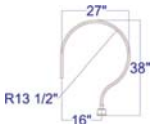

PM50

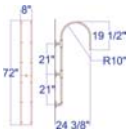

WM85BP

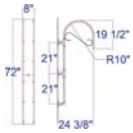

WM85SCBP

PENDANT MOUNTS

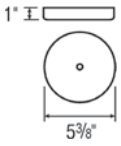

BLC (Black Cord & Canopy)

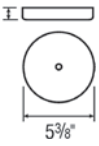

WHC (White Cord & Canopy)

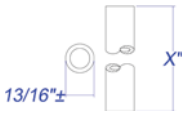

2ST (1/2" Stem & Flat Canopy)

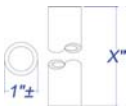

3ST (3/4" Stem & Flat Canopy)

© 2014 ANP Lighting. All rights reserved. These specifications are intended for general purposes only.
ANP reserves the right to change material or design, without prior notice, in a continuing effort to upgrade its products.

1-800-548-3227
ANPlighting.com

Project: _____

Customer No: _____

Fixture Type: _____

Quantity: _____

DRIVER HOUSING

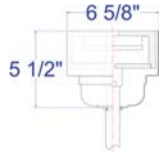

RTC (WPL Ballast Canopy)

RTCNC (WPL Ballast Canopy/No Spun Cover)

ACCESSORIES

CB (Cast Back Plate)

CBC (Cast Back Plate Spun Alum. Cover)

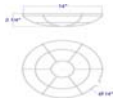

GR14 (14" Wire Grill)

PC Button Photo Cell (Remote Only)

SC (Scroll for Arm)

SLC (Sloped Ceiling Mount)

SQ (Square Back Plate)

STC (Flat Ceiling Stem Canopy)

SWL (Swivel)

© 2014 ANP Lighting. All rights reserved. These specifications are intended for general purposes only.
ANP reserves the right to change material or design, without prior notice, in a continuing effort to upgrade its products.

1-800-548-3227
ANPlighting.com

Shaper™
shaperlighting.com

DESCRIPTION

674 Luminous Wall Sconce features horizontal trim bars with a vertical fin detail and is ADA compliant. Design options, such as perforated metal, colored acrylic, and different trim bar configurations are available.

Catalog #		Type
Project		
Comments		Date
Prepared by		

SPECIFICATION FEATURES

Material
Painted solid aluminum with a matte white acrylic diffuser with a regressed aluminum perf shield. Wet location lamp and ballast housing with 1/8" clear acrylic diffuser.

Finish
Premium TGIC polyester powder coat paint, 2.5 mil nominal thickness for superior protection against fade and wear.
Standard: Aluminum Paint (ALP).
Premium: Black Paint (BK), Bronze Metallic Paint (BM), Dark Platinum Paint (DP), Gold Metallic Paint (GM), Graphite Metallic Paint (GRM), Grey Paint (GY), White Paint or Custom Color (CC).

Optics
Refer to www.shaperlighting.com for complete photometrics.

Ballast
Integral electronic HPF multi-volt 120/277V (347V Canada), thermally protected with end-of-life circuitry to accommodate the specified lamp wattage.

Lamp/Socket
31": Two (2) 14W T5 linear miniature bi-pin fluorescent lamps.
43": Two (2) 21W T5 linear miniature bi-pin fluorescent lamps.
55": Two (2) 28W T5 linear miniature bi-pin fluorescent lamps.
Fluorescent socket injection molded plastic. Lamps furnished by others.

LED
31" L3:2000 nominal lumens at max 19W
43" L4:3000 nominal lumens at max 28W
55" L5:4000 nominal lumens at max 37W

Long-life LED system coupled with electrical driver to deliver optimal performance. Electronic drivers are available for 120-277 applications.A 0-10V dimming control is available (Standard) on all models.

Installation
Supplied with a mounting back for a standard 4" J-box or stucco ring.

Options
Modified Length - Contact factory, Alternative Trim Bars or Perf Accent Design - Contact factory, Green Glass Acrylic (GGA).

Labels
U.L. and C.U.L. listed for wet location. ADA compliant.

Modifications
Shaper's skilled craftspeople with their depth of experience offer the designer the flexibility to modify standard exterior wall luminaires for project specific solutions. Contact the factory regarding scale options, unique finishes, mounting, additional materials/colors, or decorative detailing.

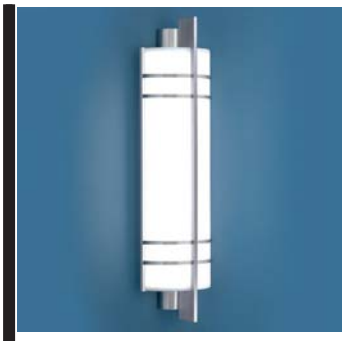

674-WP SERIES

Exterior Wall Luminaire
Luminous Sconce

ARRA

Shaper Lighting certifies that its products satisfy the requirements of Section 1605 of the American Recovery and Reinvestment Act (also known as the ARRA Buy American provision).

AMERICAN DISABILITIES ACT (ADA)

Shaper offers a large selection of ADA interior and exterior wall luminaires. ADA requires all fixtures below 68" to have a maximum projection of 4".

Shaper™
shaperlighting.com

ORDERING INFORMATION

Sample Number: 674-55-WP-T5/2/28-277V-ALP

Series	Size	MountingType	Lamp	Voltage	Finish [4]	Options
674 = Luminous Wall Sconce	31" 43" 55"	**WP** = Exterior Wall	T5/2/14 [1] T5/2/21 [2] T5/2/28 [3] **LED** L3/827 [1] L4/827 [2] L5/827 [3] L3/830 [1] L4/830 [2] L5/830 [3] L3/835 [1] L4/835 [2] L5/835 [3] L3/840 [1] L4/840 [2] L5/840 [3]	120V 277V 347V [5]	**Standard** **ALP** = Aluminum Paint **Premium** **BK** = Black **BM** = Bronze Metallic Paint **CC** = Custom Color **DP** = Dark Platinum Paint **GM** = Gold Metallic Paint **GRM** = Graphite Metallic Paint **GY** = Grey **WH** = White	**GGA** =Green Glass Acrylic

BLACK FOR FABRIK AND BRONZE FOR TENANT SPACES 1 AND 2

[1] Available in 31".
[2] Available in 43".
[3] Available in 55".
[4] Premium TGIC polyester powder coat paint, 2.5 mil nominal thickness for superior protection against fade and wear.
[5] For T5 lamping only

Shaper™
shaperlighting.com

MOUNTING TYPE

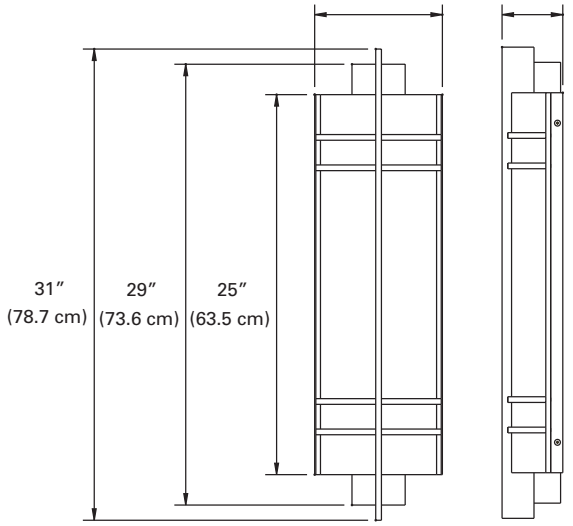

674-31-WP STANDARD

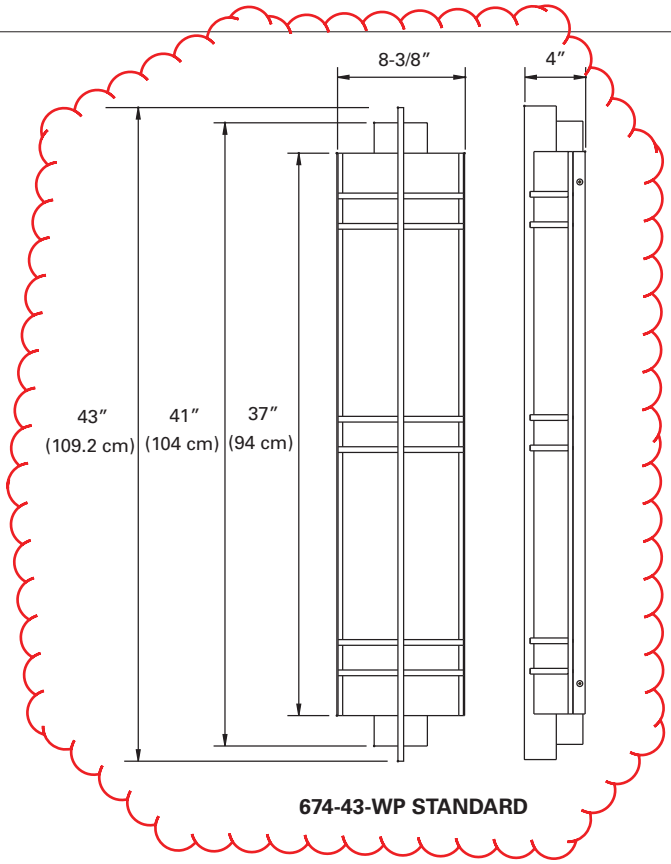

674-43-WP STANDARD

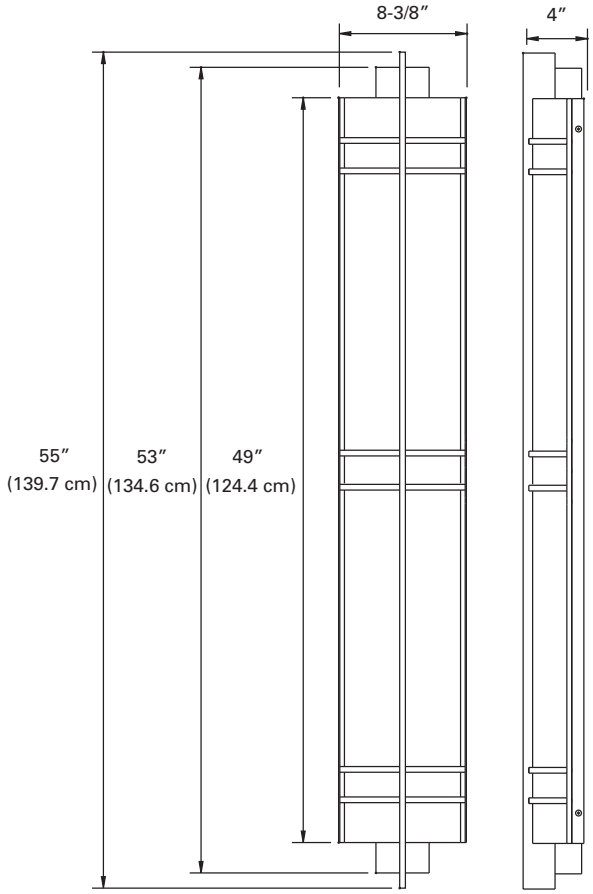

674-55-WP STANDARD

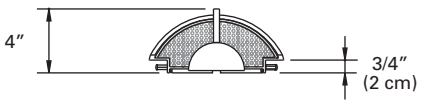

EXISTING SITE PHOTOS

pdg ARCHITECTS
parkerdesigngroupparchitects
843 785 5171 POST OFFICE BOX 5010 HILTON HEAD ISLAND SC 29938

NOTES:

1. THIS CONSTRUCTION DOCUMENTS SET HAS BEEN CREATED TO ILLUSTRATE THE GENERAL DESIGN INTENT OF THE PROJECT. THE CONTRACTOR SHALL WORK CLOSELY WITH THE OWNER'S REP. AND NOTIFY HIM AS ADDITIONAL INFORMATION IS NEEDED TO PROPERLY CONSTRUCT/INSTALL/BUILD ELEMENTS DEPICTED HEREIN.
2. FIELD ADJUST EXISTING UTILITIES AS REQUIRED. LOCATE PRIOR TO CONSTRUCTION.
3. DECORATIVE CONCRETE PAVER STYLE & COLOR TO MATCH EXISTING.
4. PAVER HATCH PATTERN DENOTES HERRINGBONE PAVER DIRECTION DESIGN INTENT.
5. ADA TRUNCATED DOME TILES TO MATCH EXISTING.
6. CONTRACTOR SHALL COORDINATE CONDUIT LOCATIONS (I.E. IRRIGATION, ELECTRICAL, ETC.) WITH SUBSEQUENT DRAWINGS PRIOR TO PAVEMENT INSTALLATION.
7. THE CONTRACTOR SHALL BE RESPONSIBLE FOR LOCATING ALL EXISTING UNDERGROUND UTILITIES PRIOR TO BEGINNING CONSTRUCTION ACTIVITIES AND FOR AVOIDING ALL CONFLICTS WITH SAME. ANY DAMAGE TO EXISTING UTILITIES SHALL BE REPAIRED AT THE EXPENSE OF THE CONTRACTOR.

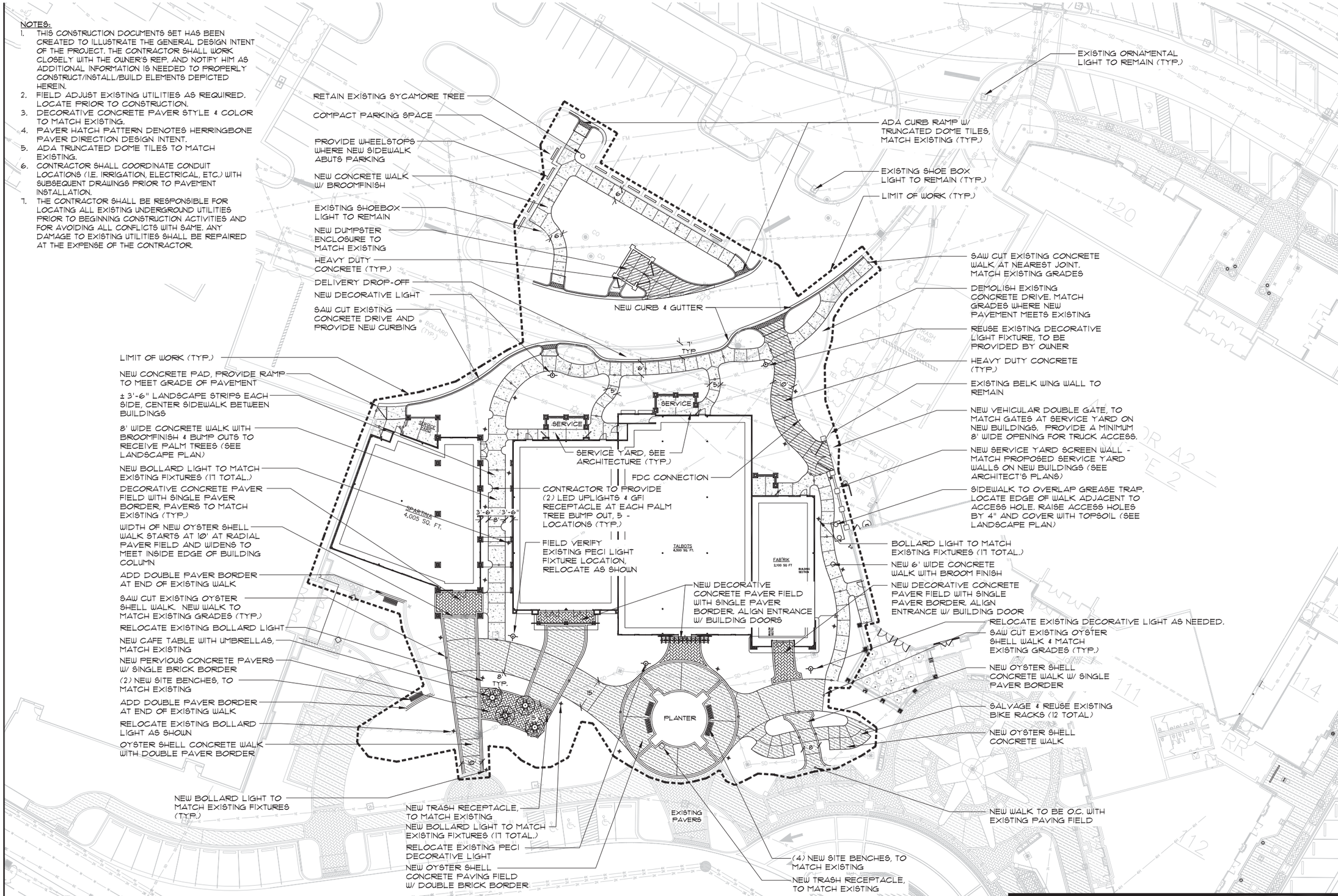

0 10' 20' 40' 60' 80'

SCALE: 1"=20'

NORTH

PLAN IS SUBJECT TO CHANGE.

BLANCHARD & CALHOUN COMMERCIAL
Atlanta, GA

PERMIT DOCUMENTS

SHELTER COVE MALL REDEVELOPMENT

Hilton Head Island, SC

DRAWN BY: DM

CHECKED BY: TT

This drawing is an instrument of service & remains the property of Wood+Partners Inc. It may not be copied or reproduced in any manner without written permission.

#	REVISION	DATE	BY
1	GENERAL REVISIONS	8-12-16	

DATE
8-12-16

PROJECT NUMBER
01-12001

SHEET TITLE
SITE PLAN

Wood+Partners Inc. WPi
Landscape Architects
Land Planners
PO Box 23949 ■ Hilton Head Island, SC 29925
843.681.8818 ■ Fax 843.681.7882 ■ www.woodandpartners.com

SHEET NUMBER
L1

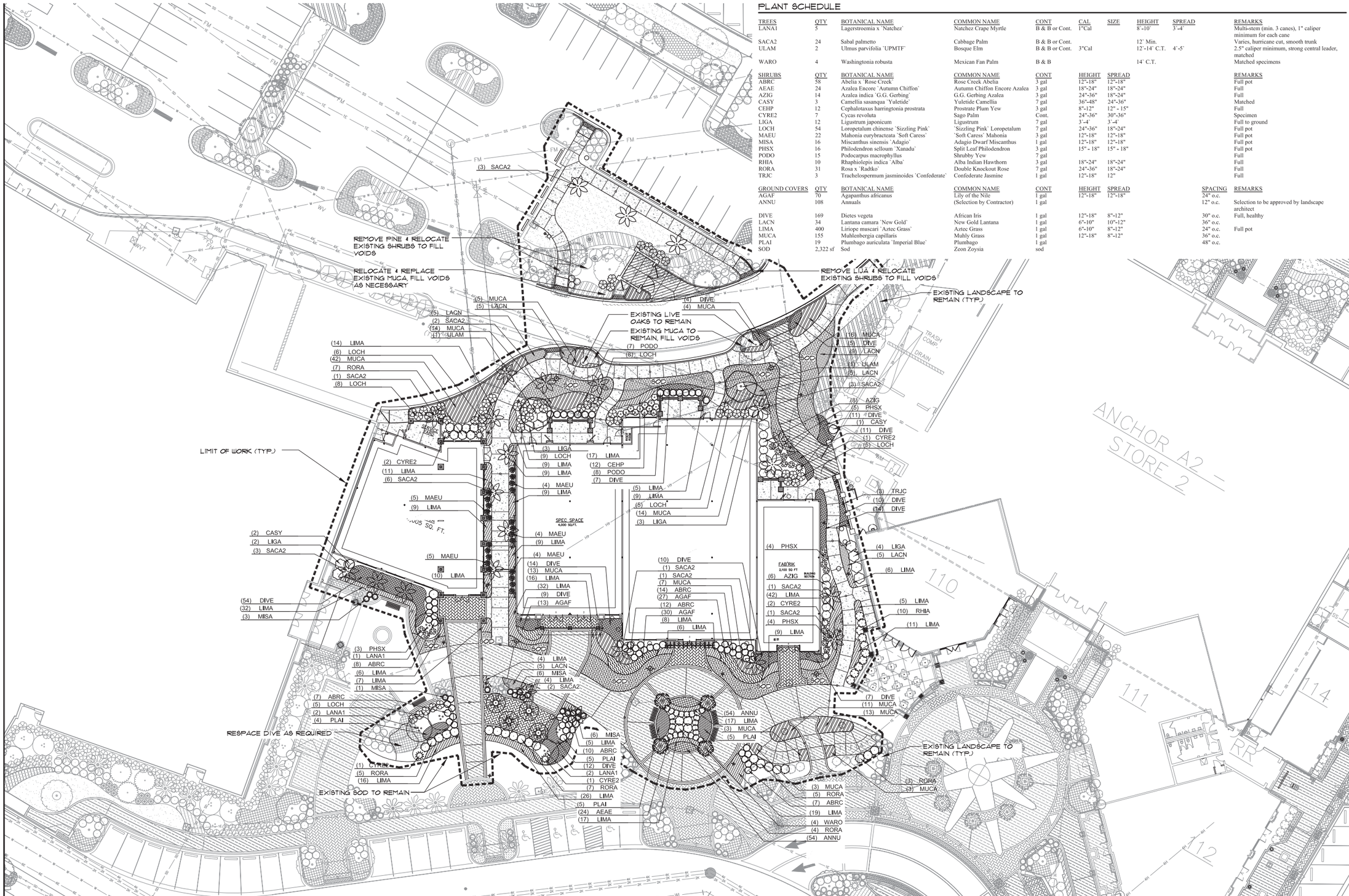

PLANT SCHEDULE

TREES	QTY	BOTANICAL NAME	COMMON NAME	CONT	CAL	SIZE	HEIGHT	SPREAD	REMARKS
LANA1	5	Lagerstroemia x `Natchez`	Natchez Crape Myrtle	B & B or Cont.	1"Cal		8`-10`	3`-4`	Multi-stem (min. 3 canes), 1" caliper minimum for each cane
SACA2	24	Sabal palmetto	Cabbage Palm	B & B or Cont.			12` Min.		Varies, hurricane cut, smooth trunk
ULAM	2	Ulmus parvifolia `UPMTF`	Bosque Elm	B & B or Cont.	3"Cal		12`-14` C.T.	4`-5`	2.5" caliper minimum, strong central leader, matched
WARO	4	Washingtonia robusta	Mexican Fan Palm	B & B			14` C.T.		Matched specimens

SHRUBS	QTY	BOTANICAL NAME	COMMON NAME	CONT	HEIGHT	SPREAD	REMARKS
ABRC	58	Abelia x `Rose Creek`	Rose Creek Abelia	3 gal	12"-18"	12"-18"	Full pot
AEAE	24	Azalea Encore `Autumn Chiffon`	Autumn Chiffon Encore Azalea	3 gal	18"-24"	18"-24"	Full
AZIG	14	Azalea indica `G.G. Gerbing`	G.G. Gerbing Azalea	3 gal	24"-36"	18"-24"	Full
CASY	3	Camellia sasanqua `Yuletide`	Yuletide Camellia	7 gal	36"-48"	24"-36"	Matched
CEHP	12	Cephalotaxus harringtonia prostrata	Prostrate Plum Yew	3 gal	8"-12"	12" - 15"	Full
CYRE2	7	Cycas revoluta	Sago Palm	Cont.	24"-36"	30"-36"	Specimen
LIGA	12	Ligustrum japonicum	Ligustrum	7 gal	3`-4`	3`-4`	Full to ground
LOCH	54	Loropetalum chinense `Sizzling Pink`	`Sizzling Pink` Loropetalum	7 gal	24"-36"	18"-24"	Full pot
MAEU	22	Mahonia eurybracteata `Soft Caress`	`Soft Caress` Mahonia	3 gal	12"-18"	12"-18"	Full pot
MISA	16	Miscanthus sinensis `Adagio`	Adagio Dwarf Miscanthus	1 gal	12"-18"	12"-18"	Full pot
PHSX	16	Philodendron selloum `Xanadu`	Split Leaf Philodendron	3 gal	15" - 18"	15" - 18"	Full pot
PODO	15	Podocarpus macrophyllus	Shrubby Yew	7 gal			Full
RHIA	10	Rhaphiolepis indica `Alba`	Alba Indian Hawthorn	3 gal	18"-24"	18"-24"	Full
RORA	31	Rosa x `Radtko`	Double Knockout Rose	7 gal	24"-36"	18"-24"	Full
TRJC	3	Trachelospermum jasminoides `Confederate`	Confederate Jasmine	1 gal	12"-18"	12"	Full

GROUND COVERS	QTY	BOTANICAL NAME	COMMON NAME	CONT	HEIGHT	SPREAD	SPACING	REMARKS
AGAF	70	Agapanthus africanus	Lily of the Nile	1 gal	12"-18"	12"-18"	24" o.c.	
ANNU	108	Annuals	(Selection by Contractor)	1 gal			12" o.c.	Selection to be approved by landscape architect
DIVE	169	Dietes vegeta	African Iris	1 gal	12"-18"	8"-12"	30" o.c.	Full, healthy
LACN	34	Lantana camara `New Gold`	New Gold Lantana	1 gal	6"-10"	10"-12"	36" o.c.	
LIMA	400	Liriope muscari `Aztec Grass`	Aztec Grass	1 gal	6"-10"	8"-12"	24" o.c.	Full pot
MUCA	155	Muhlenbergia capillaris	Muhly Grass	1 gal	12"-18"	8"-12"	36" o.c.	
PLAI	19	Plumbago auriculata `Imperial Blue`	Plumbago	1 gal			48" o.c.	
SOD	2,322 sf	Sod	Zeon Zoysia	sod				

SCALE: 1"=20'

0 10' 20' 40' 60' 80'

NORTH

PLAN IS SUBJECT TO CHANGE.

BLANCHARD & CALHOUN COMMERCIAL
Atlanta, GA

PERMIT DOCUMENTS

SHELTER COVE MALL REDEVELOPMENT

Hilton Head Island, SC

DRAWN BY:
DM

CHECKED BY:
TT

This drawing is an instrument of service & remains the property of Wood+Partners Inc. It may not be copied or reproduced in any manner without written permission.

#	REVISION	DATE	BY
1	GENERAL REVISIONS	6-12-16	
2	GENERAL REVISIONS	8-30-16	

DATE
8-30-16

PROJECT NUMBER
01-12001

SHEET TITLE
LANDSCAPE PLAN

Wood+Partners Inc. WPi
Landscape Architects
Land Planners
PO Box 23949 ■ Hilton Head Island, SC 29925
843.681.8818 ■ Fax 843.681.7088 ■ www.woodandpartners.com

SHEET NUMBER
L2

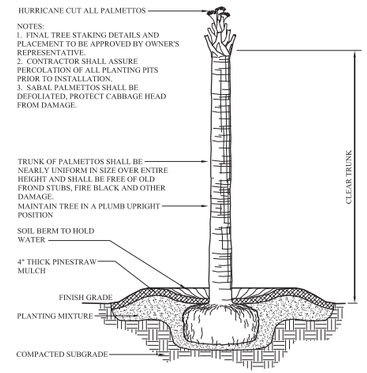

1 L3 PALM TREE
SCALE: N.T.S.

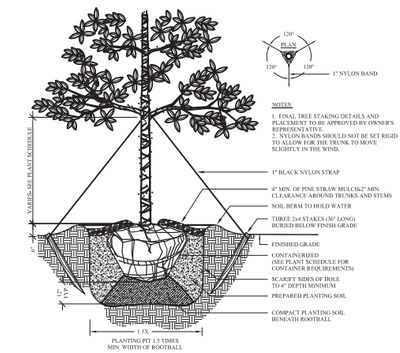

2 L3 SHADE TREE
SCALE: N.T.S.

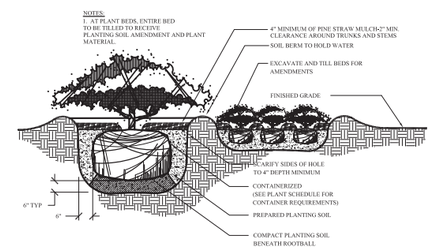

3 L3 SHRUB PLANTING
SCALE: N.T.S.

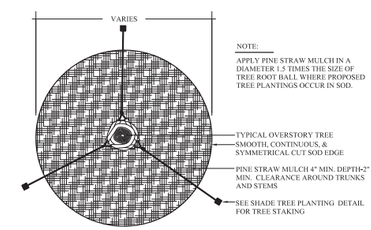

4 L3 MULCH TREE RING
SCALE: N.T.S.

GENERAL PLANTING & IRRIGATION NOTES:

1. CONTRACTOR TO MODIFY EXISTING IRRIGATION SYSTEM TO PROVIDE FULL COVERAGE OF ALL NEW PLANT MATERIAL.
2. ANY DEVIATION FROM THESE PLANS MUST BE SPECIFICALLY APPROVED BY LANDSCAPE ARCHITECT OR OWNER'S REPRESENTATIVE.
3. NOTIFY LANDSCAPE ARCHITECT OF ANY SITE CONDITIONS WHICH MAY NECESSITATE MODIFICATION TO THE PLAN. LANDSCAPE ARCHITECT SHALL, IF NECESSARY, MAKE "IN-FIELD MODIFICATIONS".
4. FINE GRADING SHALL CONSIST OF HAND RAKED SMOOTH, FREE OF ROCKS, ROOTS, AND OTHER DEBRIS, ALL AREAS TO RECEIVE LANDSCAPE PLANTING, INCLUDING LAWN AREAS IF APPLICABLE, AND/OR PINE STRAW MULCH.
5. CONTRACTOR IS RESPONSIBLE FOR INSPECTION OF EXISTING CONDITIONS AND PROMPTLY REPORTING ANY DISCREPANCIES. CONTRACTOR TO PERFORM SOIL TESTS AS SPECIFIED.
6. CONTRACTOR IS RESPONSIBLE FOR LOCATING EXISTING UTILITIES AND IS RESPONSIBLE FOR ANY DAMAGE THAT MAY OCCUR TO EXISTING UTILITIES.
7. MULCH ALL PLANTING BEDS WITH PINE STRAW OR HARDWOOD MULCH TO A 4" DEPTH.
8. CONTRACTOR VERIFIES THAT ALL PLANT MATERIAL IS DETERMINED AVAILABLE AS SPECIFIED WHEN BID/PROPOSAL IS SUBMITTED. DO NOT MAKE SUBSTITUTIONS. IF THERE ARE DIFFICULTIES LOCATING PLANT MATERIAL AS SPECIFIED, CONTACT LANDSCAPE ARCHITECT OR OWNER'S REP. PRIOR TO BIDDING.
9. PLANT SCHEDULE WAS PREPARED FOR ESTIMATING PURPOSES FOR THE CONTRACTOR'S CONVENIENCE ONLY. ITS ACCURACY IS NOT GUARANTEED. CONTRACTOR SHALL MAKE OWN QUANTITIES TAKEOFF USING DRAWINGS TO DETERMINE QUANTITIES TO HIS SATISFACTION, REPORTING PROMPTLY ANY DISCREPANCIES WHICH MAY AFFECT BIDDING.
10. THE CONTRACTOR SHALL COORDINATE WITH OWNER/OWNER'S REPRESENTATIVE TO ESTABLISH A PLANTING SCHEDULE THAT PRIORITIZES THE PLANTING OF ALL TREES AND LAWN AREAS.
11. ALL PLANTS SHALL BE SUBJECT TO APPROVAL OF THE LANDSCAPE ARCHITECT AND OWNER'S REP. BEFORE, DURING, AND AFTER INSTALLATION.
12. ALL PLANTING TECHNIQUES SHALL CONFORM TO THE APPLICABLE DETAIL.
13. ALL PLANTS SHALL HAVE A WELL FORMED HEAD WITH MINIMUM CALIPER, HEIGHT, AND SPREAD OR THE SIDE BRANCHES AS SHOWN ON THE PLANT LIST. TRUNKS SHALL BE UNDAMAGED AND SHAPE SHALL BE TYPICAL OF THE SPECIES.
14. ANNUALS TO BE PER OWNER'S CHOICE FOR SEASON OF INSTALLATION.
15. WARRANT EXTERIOR PLANTS FOR ONE YEAR FROM DATE OF SUBSTANTIAL COMPLETION, AGAINST DEFECTS INCLUDING DEATH AND UNSATISFACTORY GROWTH, EXCEPT FOR DEFECTS RESULTING FROM LACK OF ADEQUATE MAINTENANCE, NEGLECT, OR ABUSE BY OWNER, OR INCIDENTS THAT ARE BEYOND CONTRACTOR'S CONTROL.
16. ALL PLANT BEDS TO RECEIVE WEED INHIBITOR OF PREEN OR EQUAL.

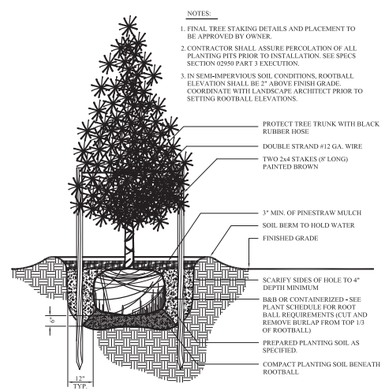

5 L3 PINE TREE
SCALE: N.T.S.

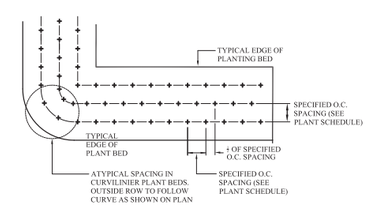

6 L3 GROUNDCOVER SPACING
SCALE: N.T.S.

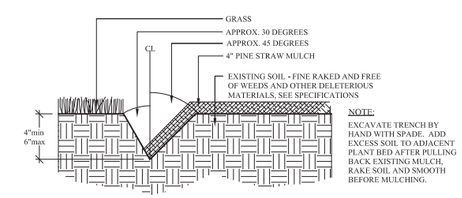

7 L3 LANDSCAPE EDGE
SCALE: N.T.S.

PLAN IS SUBJECT TO CHANGE.

BLANCHARD & CALHOUN COMMERCIAL
Atlanta, GA

PERMIT DOCUMENTS
SHELTER COVE MALL REDEVELOPMENT
Hilton Head Island, SC

DRAWN BY: DM
CHECKED BY: TT

This drawing is an instrument of service & remains the property of Wood+Partners Inc. It may not be copied or reproduced in any manner without written permission.

#	REVISION	DATE	BY
1	GENERAL REVISIONS	8-12-16	
2	GENERAL REVISIONS	8-30-16	

DATE
8-30-16
PROJECT NUMBER
01-12001
SHEET TITLE
LANDSCAPE DETAILS

Wood+Partners Inc. WPi
Landscape Architects
Land Planners
PO Box 23949 ■ Hilton Head Island, SC 29925
843.681.8818 ■ Fax 843.681.7088 ■ www.woodandpartners.com

SHEET NUMBER
L3

ARTISTIC RENDERING- NOT FOR REFERENCE

A NEW SHELL BUILDING FOR FUTURE TENANTS, TALBOTS, & FABRIK

INDEX OF DRAWINGS:

ARCHITECTURAL:

C-0 TITLE SHEET
A-1 FLOOR PLAN
A-2 ROOF PLAN AND DETAILS
A-3 ELEVATIONS
A-4 BUILDING SECTIONS
A-5 WALL SECTIONS
A-6 WALL SECTIONS
A-7 WALL SECTIONS

CIVIL:

L-1 SITE PLAN
L-2 PLANTING PLAN
L-3 LANDSCAPE DETAILS

DESIGN CRITERIA

DESCRIPTON:

1 STORY RED STEEL FRAME ON SPREAD FOOTINGS. EXTERIOR WALLS ARE METAL STUD & GYPSUM SHEATHING W/ STUCCO AND CEMENT BOARD SIDING. CONCRETE SLAB. METAL BAR JOIST ROOF W/ TPO AND METAL STANDING SEAMED ROOFING

Design Criteria for Code Compliance as of: 2015 IBC

Type of Construction: 2
Sprinkler: YES ~~Protected~~/Unprotected
Occupancy: MERCANTILE

ALLOWABLE BUILDING AREAS (Table 503):

Building Floor Areas	Actual	Allowed
Mercantile	12,600 sqft	50,000 sqft

ALLOWABLE HEIGHTS (Table 503):

	Actual	Allowed
Building Height Above Grade:	26'-0"	75.0'
Building Height in Stories:	1	3

pdg parkerdesigngroup architects
843.785.5571 POST OFFICE BOX 5000 HILTON HEAD ISLAND, SC 29938

These documents & designs are the property of Parker Design Group | Architects & are not to be used or reproduced there of or for designs, working drawings, or construction of buildingswithout the written authorization from the copy write owner PDG/Architects 2016 copyright C

A NEW BUILDING SHELL FOR:
TENANT SPACE 1 & 2,
TALBOTS, & FABRIK
Towne Center @ Shelter Cove
Hilton Head Island, S.C.

REVISIONS	

DRAWN BY: TP
CHECKED BY: TP
DATE OF ISSUE: 08/29/16
SCALE
JOB NO. 1614
SHEET
C.0
OF SHEETS

WINDOW SCHEDULE

1. ALL GLAZING TO 1" CLEAR LOW 'E'
2. ALL STOREFRONT OPENINGS SHALL RECEIVE A CORRUGATED GALV. STEEL STORE PANEL SYSTEM W/ PERMANENT EXTRUDED ALUM. TRACK SYSTEM BY EASTERN METAL SUPPLY OR EQ. HURRICANE PANEL.

MARK	TYPE	MFG. NUMBER	SIZE	REMARKS
A	STOREFRONT	KAWNEER 451	6-0X7-0"	
B	STOREFRONT	KAWNEER 451	6-4X10-0"	
C	STOREFRONT	KAWNEER 451	6-0X7-6"	
D	STOREFRONT	KAWNEER 451	2-6X7-6"	
E	STOREFRONT	KAWNEER 451	5-0X7-0"	

DOOR & FRAME SCHEDULE

NOTE:
1. PROVIDE TEMPERED GLASS NOTED IN ELEV. KEYS

MARK	DOOR						FRAME			
	Size			Material / Finish	Type	Manuf.	Mat.	Jamb depth	FIRE RATING	REMARKS
	W	H	T							
1	6'-0"	8'-0"		ALUM.	1	KAWNEER	ALUM.		N.A.	
2	6'-0"	8'-0"		ALUM.	1	KAWNEER	ALUM.		N.A.	
3	6'-0"	8'-0"		WOOD	2		ALUM.		N.A.	SELECTED BY OWNER
4	3'-0"	8'-0"		METAL	3	KAWNEER	ALUM.		N.A.	
5	3'-0"	8'-0"	1 3/4"	METAL	4		METAL		N.A.	
6	3'-0"	8'-0"	1 3/4"	METAL	4		METAL		N.A.	
7	3'-0"	8'-0"	1 3/4"	WOOD	4		METAL		N.A.	
8	3'-0"	8'-0"	1 3/4"	METAL	4		METAL		N.A.	
9	3'-0"	8'-0"	1 3/4"	METAL	5		METAL		N.A.	TRANSOM SEE ELEV.
10	3'-0"	8'-0"	1 3/4"	METAL	5		METAL		N.A.	TRANSOM SEE ELEV.

DOOR & FRAME ELEVATION KEYS

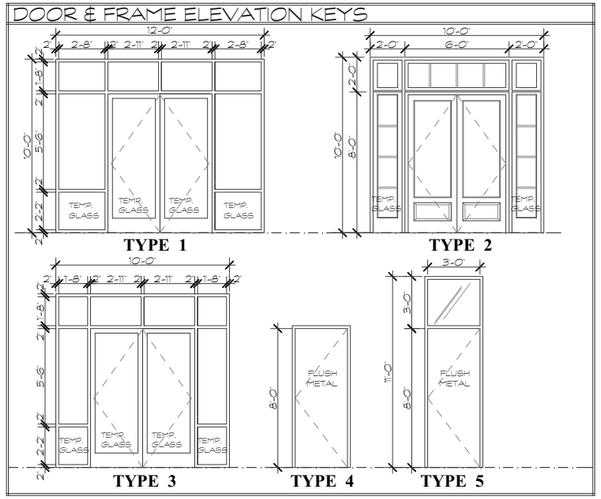

TYPE 1 TYPE 2 TYPE 3 TYPE 4 TYPE 5

WINDOW ELEVATIONS

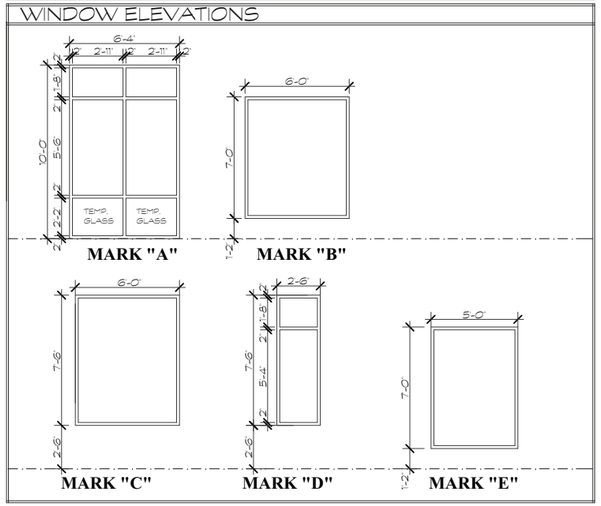

MARK "A" MARK "B" MARK "C" MARK "D" MARK "E"

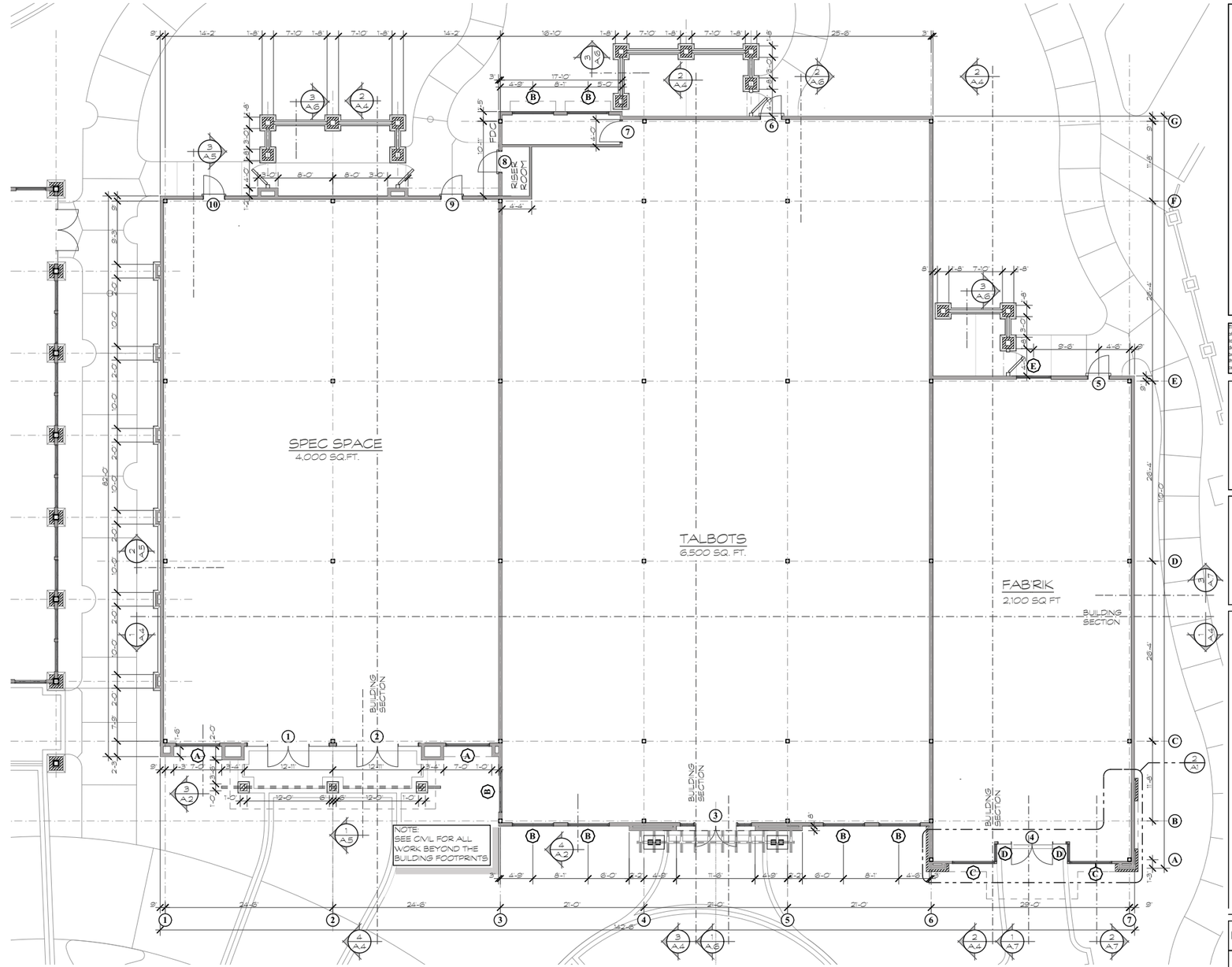

FLOOR PLAN

SCALE: 1/8"=1'-0"

1 A-1

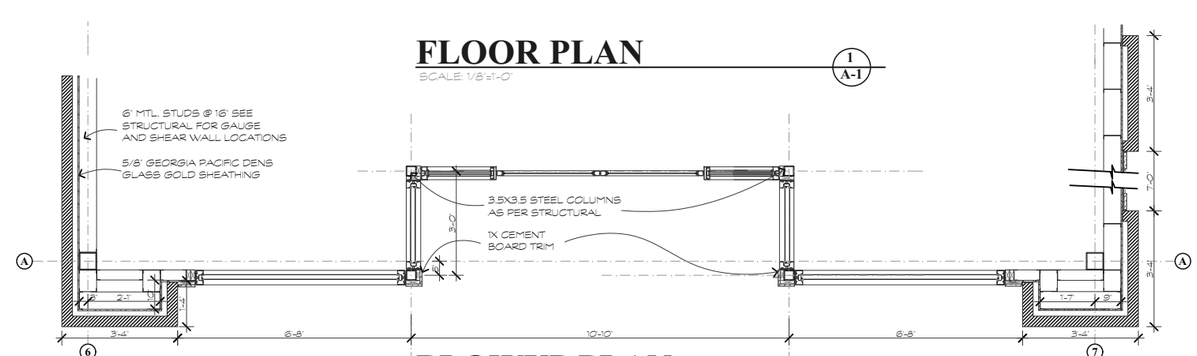

BLOWUP PLAN

SCALE: 1/2"=1'-0"

2 A-1

pdg ARCHITECTS
parkerdesigngroup architects
843.785.5571 POST OFFICE BOX 5000 HILTON HEAD ISLAND, SC 29938

These documents & designs are the property of Parker Design Group | Architects & are not to be used or reproduced there of or for designs, working drawings, or construction of buildingswithout the written authorization from the copy write owner PDG/Architects 2016 copyright C

A NEW BUILDING SHELL FOR:
TENANT SPACE 1 & 2.
TALBOTS, & FABRIK
Towne Center @ Shelter Cove
Hilton Head Island, S.C.

REVISIONS	

DRAWN BY	TP
CHECKED BY	TP
DATE OF ISSUE:	08/29/16
SCALE	
JOB NO.	1614
SHEET	A-1
OF	SHEETS

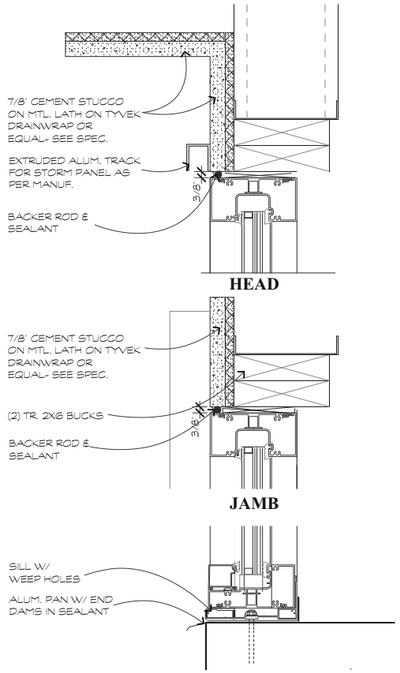

WINDOW DETAIL

SCALE: 3"=1'-0"

3 / A-2

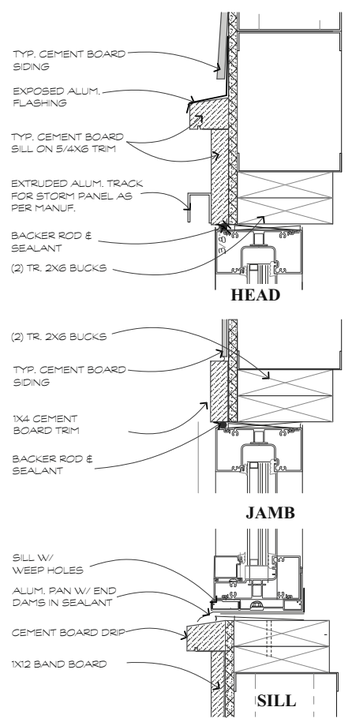

WINDOW DETAIL

SCALE: 3"=1'-0"

4 / A-2

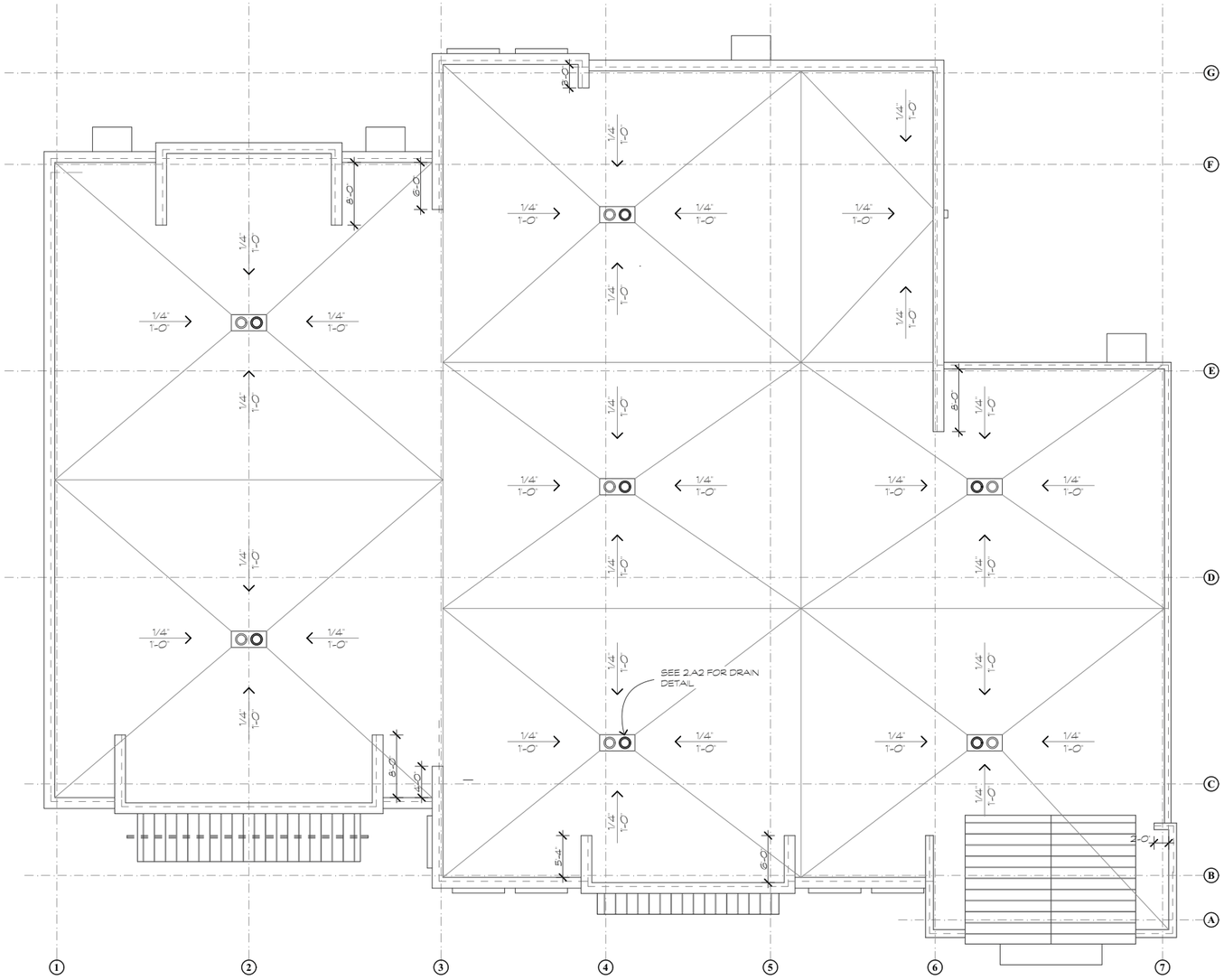

ROOF PLAN

SCALE: 1/8"=1'-0"

1 / A-2

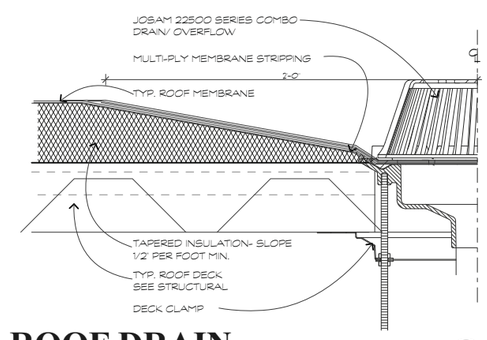

ROOF DRAIN

SCALE: 3"=1'-0"

2 / A-2

parkerdesigngroup architects
843.785.5171 POST OFFICE BOX 5000 HILTON HEAD ISLAND, SC 29938
pdg ARCHITECTS

These documents & designs are the property of Parker Design Group | Architects & are not to be used or reproduced there of or for designs, working drawings, or construction of buildingswithout the written authorization from the copy write owner PDG/Architects 2016 copyright C

A NEW BUILDING SHELL FOR:

TENANT SPACE 1 & 2.

TALBOTS, & FABRIK

Towne Center @ Shelter Cove
Hilton Head Island, S.C.

REVISIONS	

DRAWN BY	TP
CHECKED BY	TP
DATE OF ISSUE:	08/29/16
SCALE	
JOB NO.	1614
SHEET	A-2
OF	SHEETS

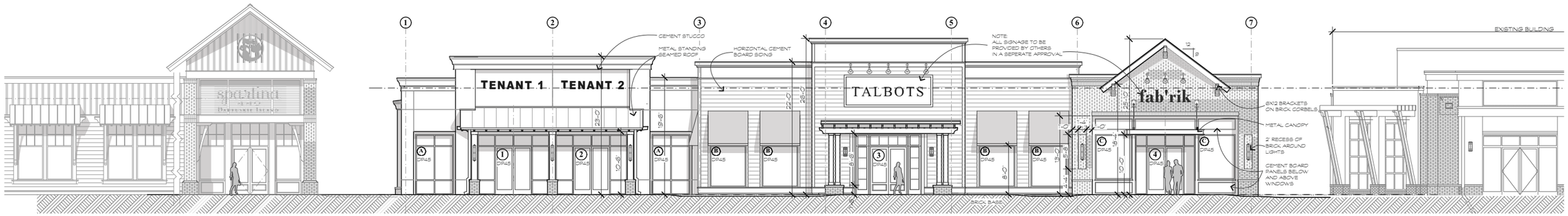

FRONT ELEVATION

SCALE: 1/8"=1'-0"

1
A-3

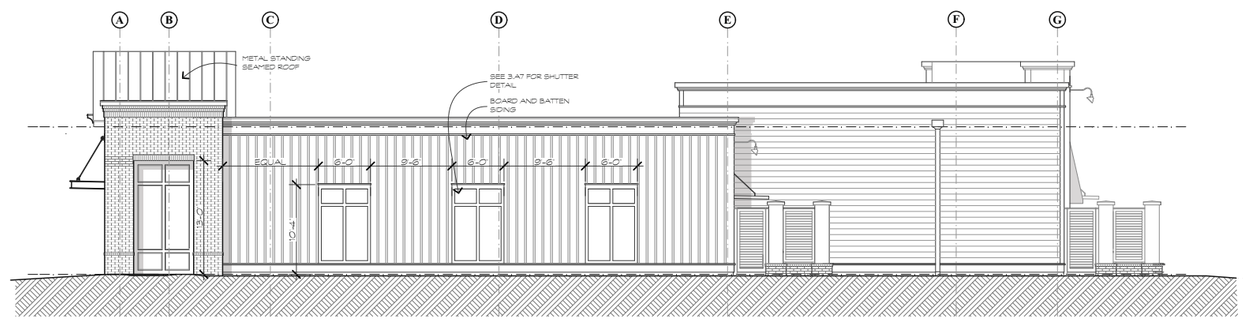

RIGHT SIDE ELEVATION

SCALE: 1/8"=1'-0"

2
A-3

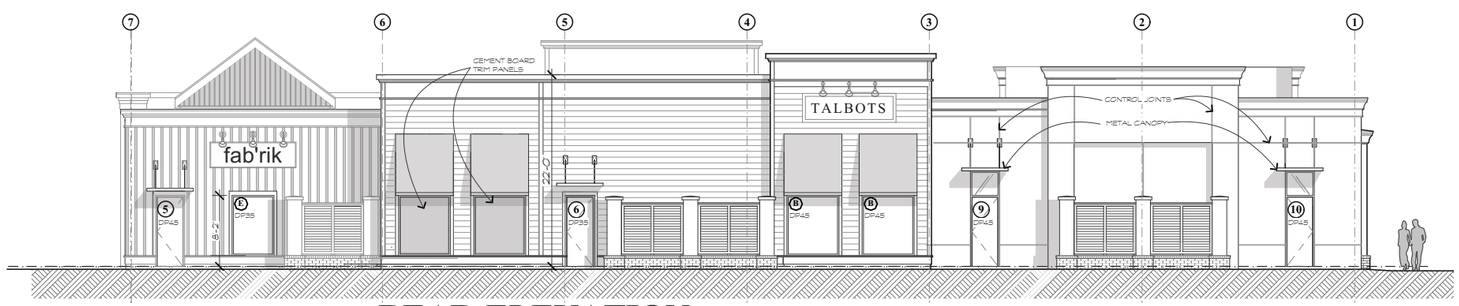

REAR ELEVATION

SCALE: 1/8"=1'-0"

3
A-3

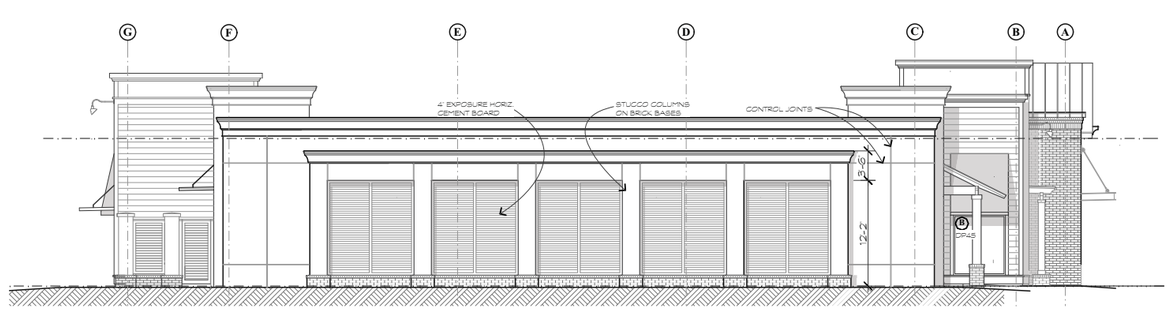

LEFT SIDE ELEVATION

SCALE: 1/8"=1'-0"

4
A-3

parkerdesigngroup architects
843.785.5571 POST OFFICE BOX 5500 HILTON HEAD ISLAND SC 29938
pdg ARCHITECTS

These documents & designs are the property of Parker Design Group | Architects & are not to be used or reproduced there of or for designs, working drawings, or construction of buildingswithout the written authorization from the copy write owner PDG/Architects 2016 copyright C

A NEW BUILDING SHELL FOR:
TENANT SPACE 1 & 2.
TALBOTS, & FABRIK
Towne Center @ Shelter Cove
Hilton Head Island, S.C.

REVISIONS	

DRAWN BY: TP
CHECKED BY: TP
DATE OF ISSUE: 08/29/16
SCALE
JOB NO. 1614
SHEET
A-3
OF SHEETS

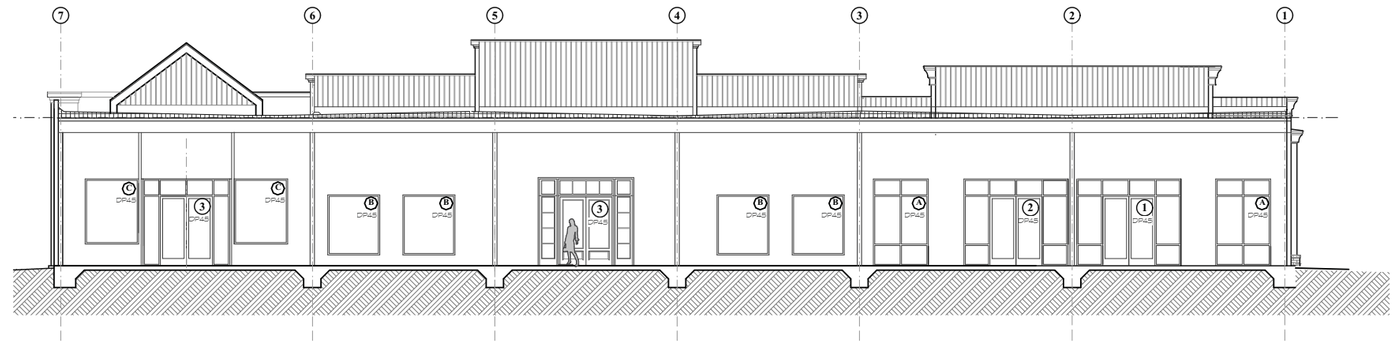

BUILDING SECTION

SCALE: 1/8"=1'-0"

1 A-4

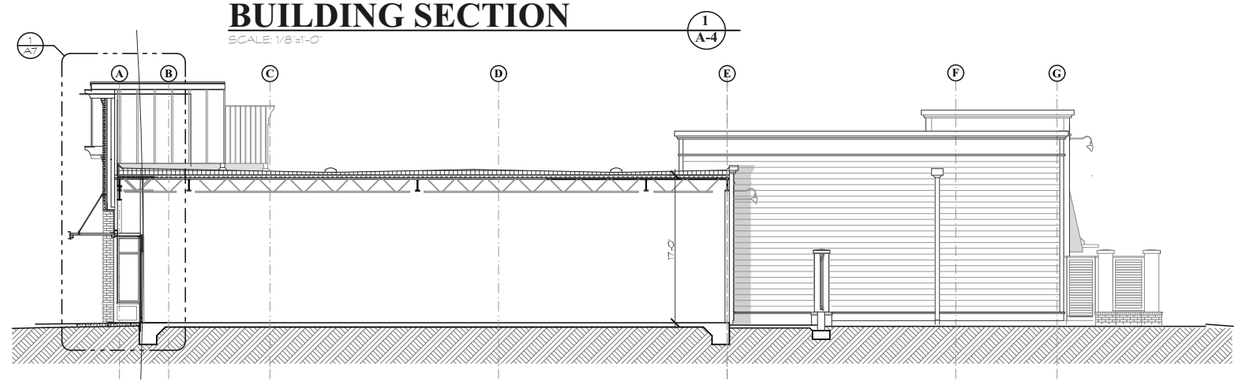

BUILDING SECTION

SCALE: 1/8"=1'-0"

2 A-4

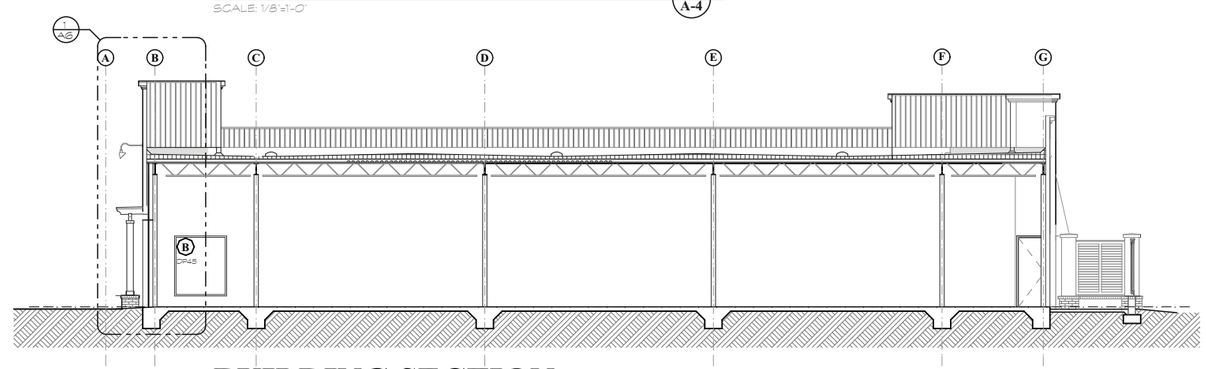

BUILDING SECTION

SCALE: 1/8"=1'-0"

3 A-4

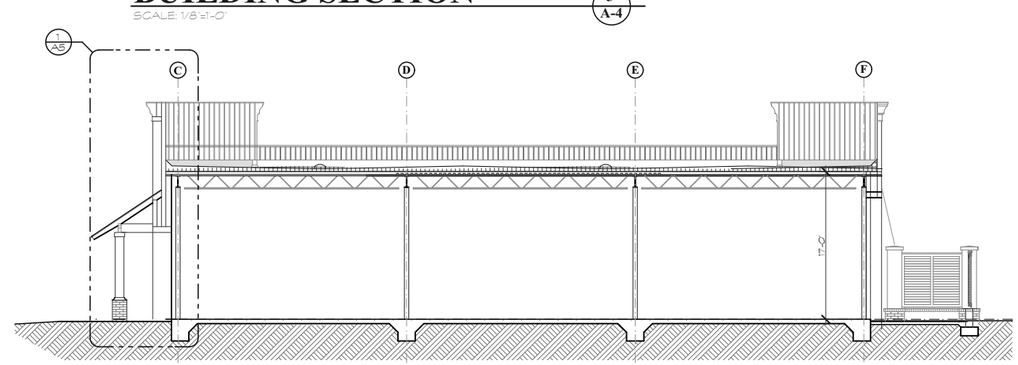

BUILDING SECTION

SCALE: 1/8"=1'-0"

4 A-4

parkerdesigngroup architects
843.785.5571 POST OFFICE BOX 5050 HILTON HEAD ISLAND, SC 29938
PDG ARCHITECTS

These documents & designs are the property of Parker Design Group | Architects & are not to be used or reproduced there of or for designs, working drawings, or construction of buildingswithout the written authorization from the copy write owner PDG|Architects 2016 copyright C

A NEW BUILDING SHELL FOR:

TENANT SPACE 1 & 2.

TALBOTS, & FABRIK

Towne Center @ Shelter Cove
Hilton Head Island, S.C.

REVISIONS	

DRAWN BY	TP
CHECKED BY	TP
DATE OF ISSUE:	08/29/16
SCALE	
JOB NO.	1614
SHEET	A-4
OF	SHEETS

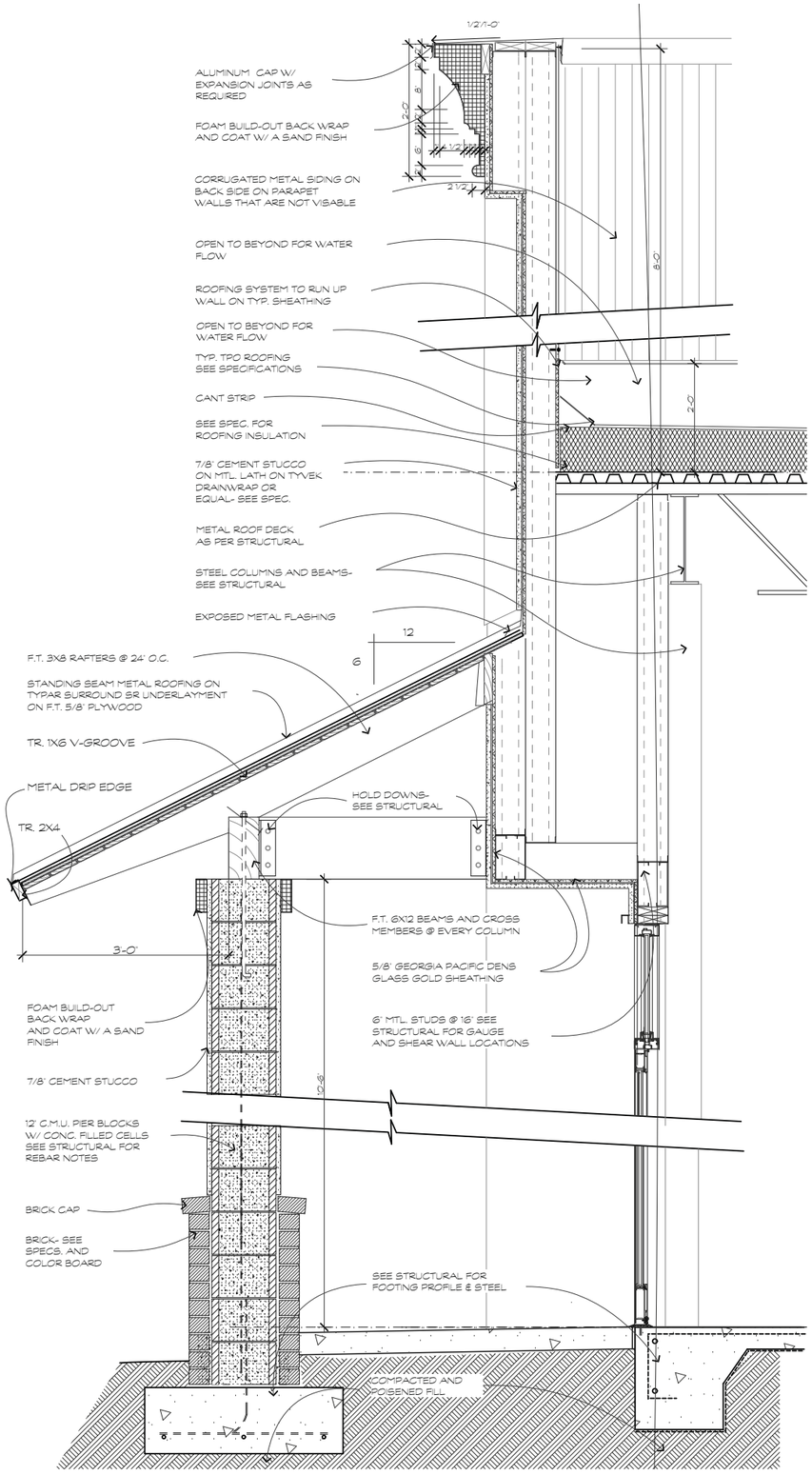

ENTRY WALL SECTION

SCALE: 1"=1'-0"

1 / A-5

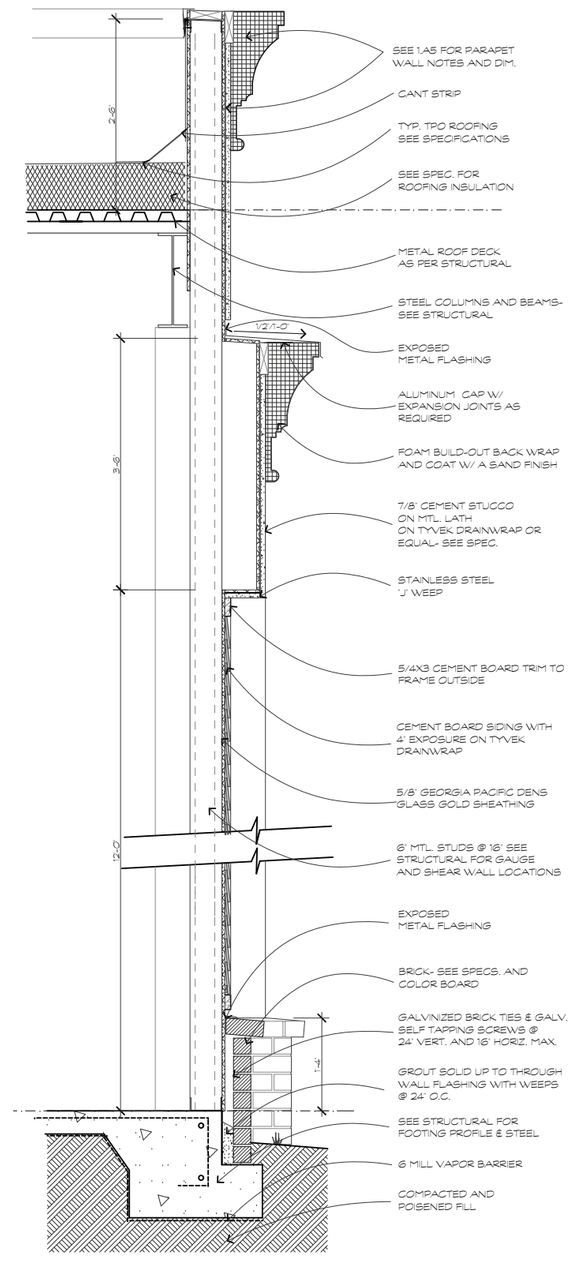

SIDE WALL SECTION

SCALE: 1"=1'-0"

2 / A-5

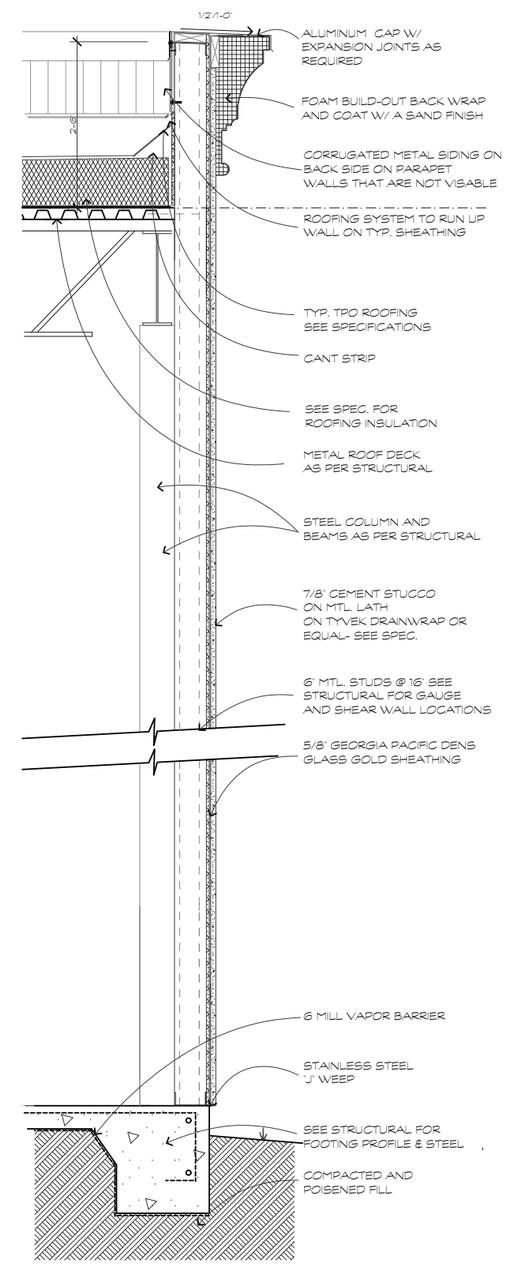

REAR WALL SECTION

SCALE: 1"=1'-0"

3 / A-5

parkerdesigngroup architects
843.785.5571 POST OFFICE BOX 5200 HILTON HEAD ISLAND SC 29938

These documents & designs are the property of Parker Design Group | Architects & are not to be used or reproduced there of or for designs, working drawings, or construction of buildingswithout the written authorization from the copy write owner PDG/Architects 2016 copyright C

A NEW BUILDING SHELL FOR:
TENANT SPACE 1 & 2,
TALBOTS, & FABRIK
Towne Center @ Shelter Cove
Hilton Head Island, S.C.

REVISIONS	

DRAWN BY	TP
CHECKED BY	TP
DATE OF ISSUE:	08/29/16
SCALE	
JOB NO.	1614
SHEET	A-5
OF	SHEETS

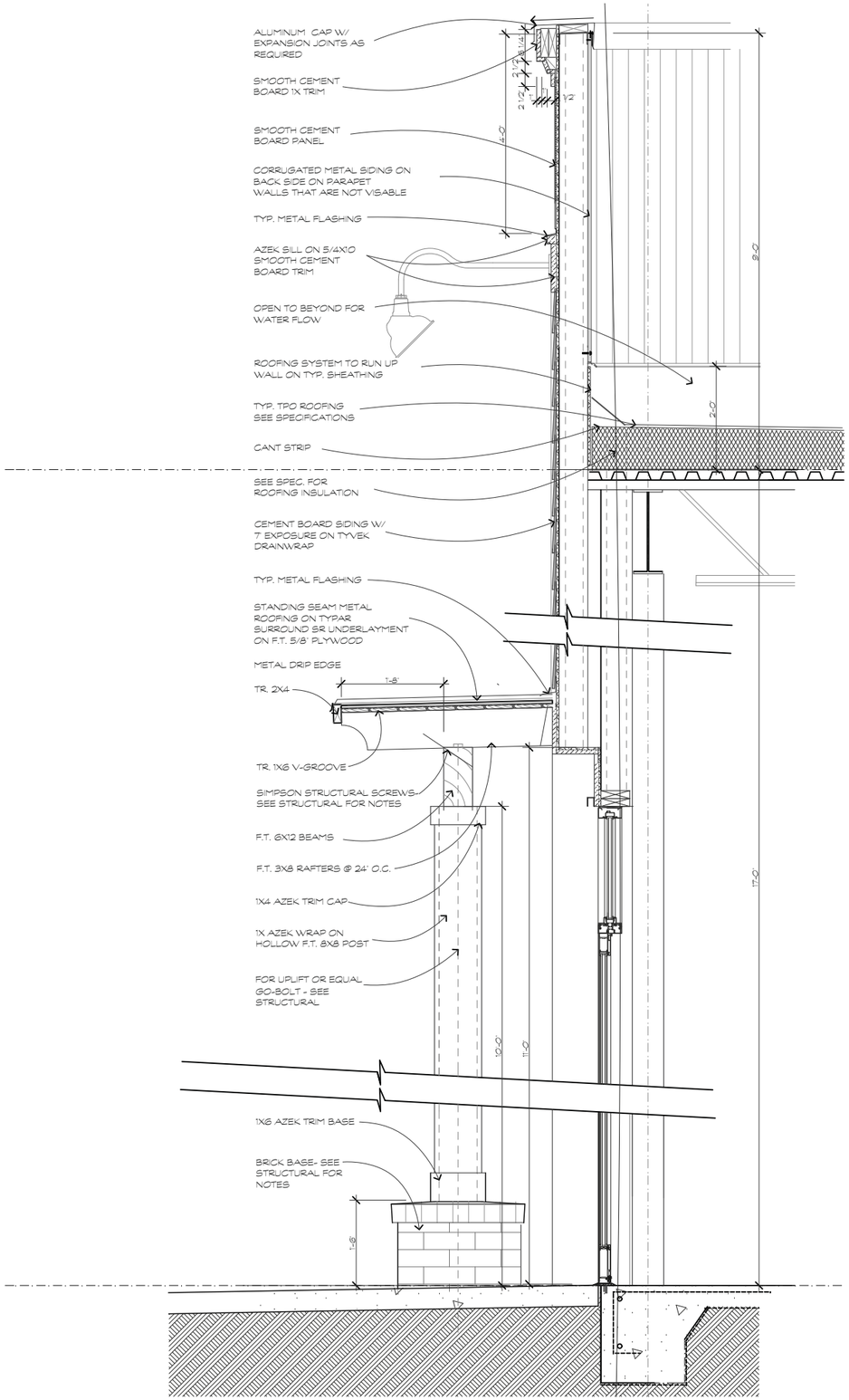

ENTRY WALL SECTION

SCALE: 1"=1'-0"

1
A-6

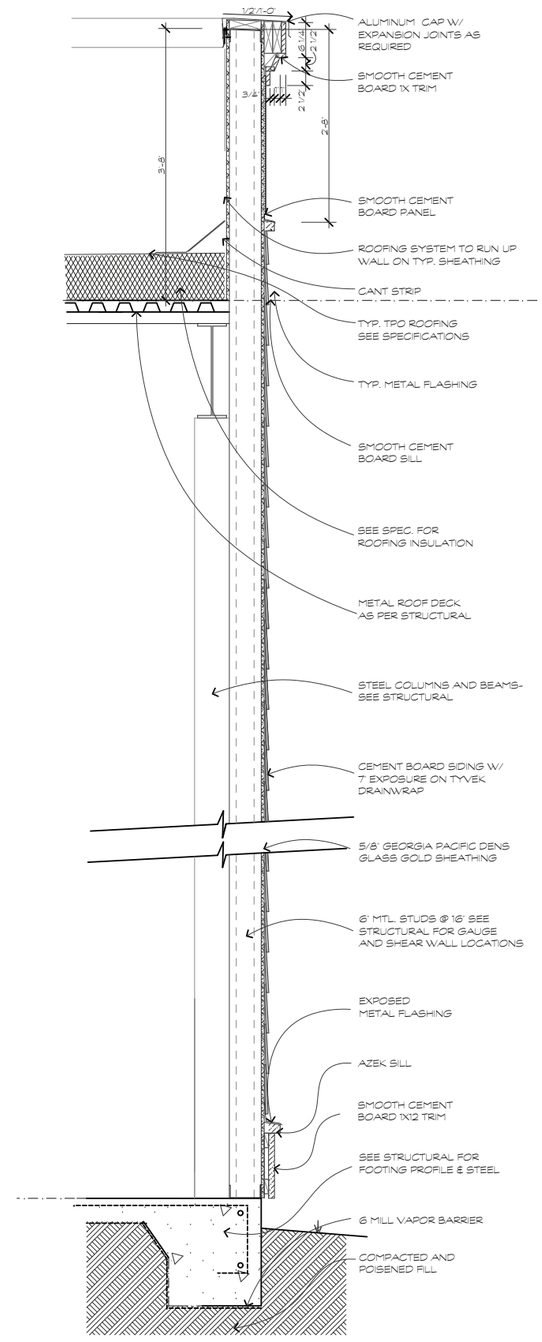

REAR WALL SECTION

SCALE: 1"=1'-0"

2
A-6

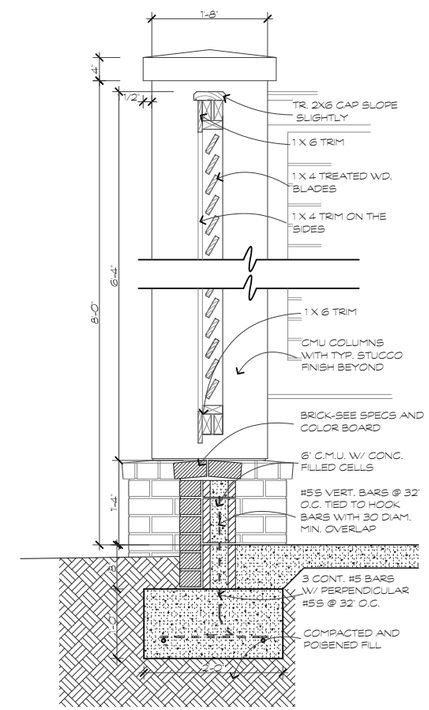

TYP. WALL SECTION

SCALE: 1"=1'-0"

3
A-6

parkerdesigngroup architects
843.785.5571 POST OFFICE BOX 5000 HILTON HEAD ISLAND SC 29938

These documents & designs are the property of Parker Design Group | Architects & are not to be used or reproduced there of or for designs, working drawings, or construction of buildingswithout the written authorization from the copy write owner PDG|Architects 2016 copyright C

A NEW BUILDING SHELL FOR:
TENANT SPACE 1 & 2,
TALBOTS, & FABRIK
Towne Center @ Shelter Cove
Hilton Head Island, S.C.

REVISIONS	

DRAWN BY: TP
CHECKED BY: TP
DATE OF ISSUE: 08/29/16
SCALE
JOB NO. 1614
SHEET
A-6
OF SHEETS

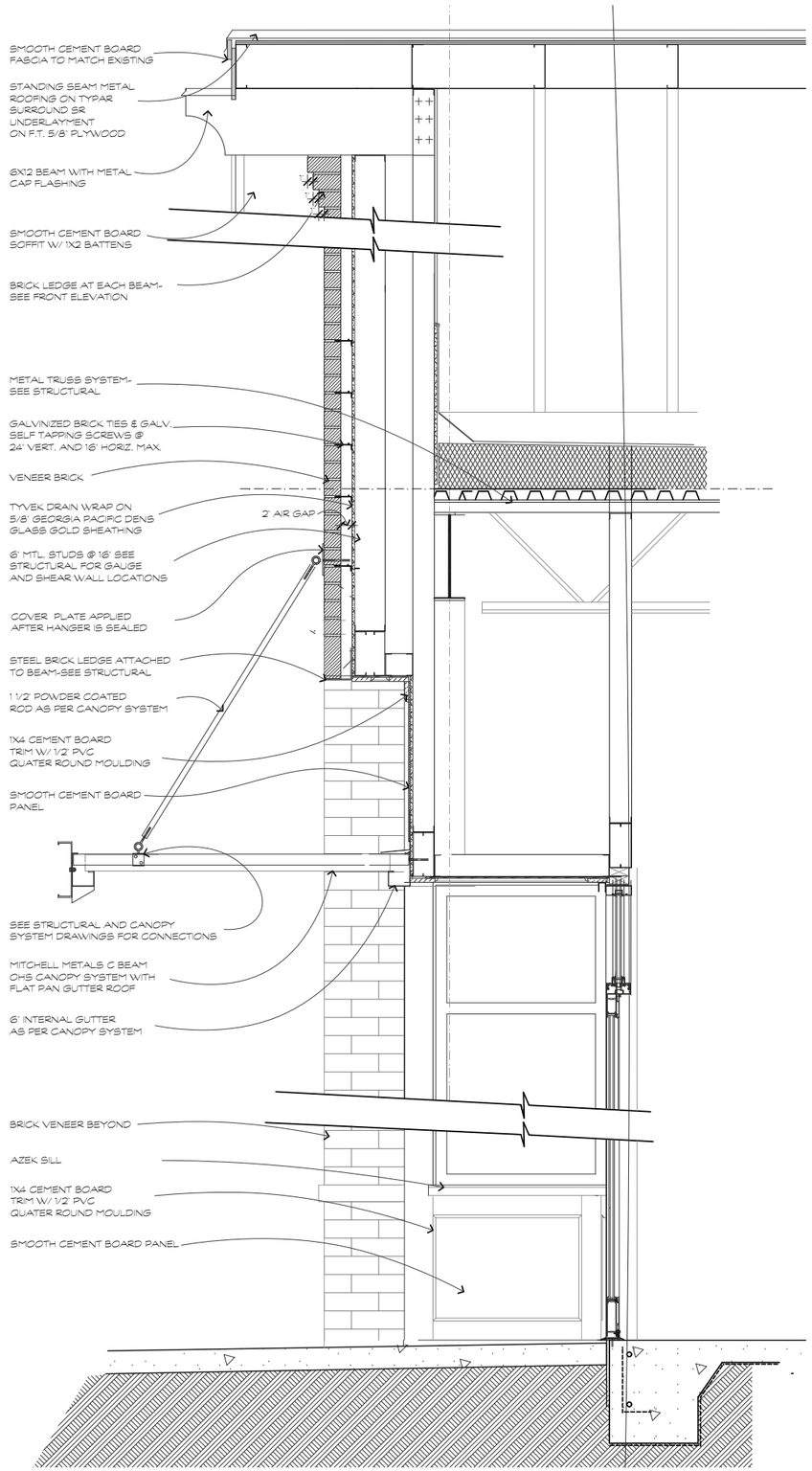

ENTRY WALL SECTION

SCALE: 1"=1'-0"

1 / A-7

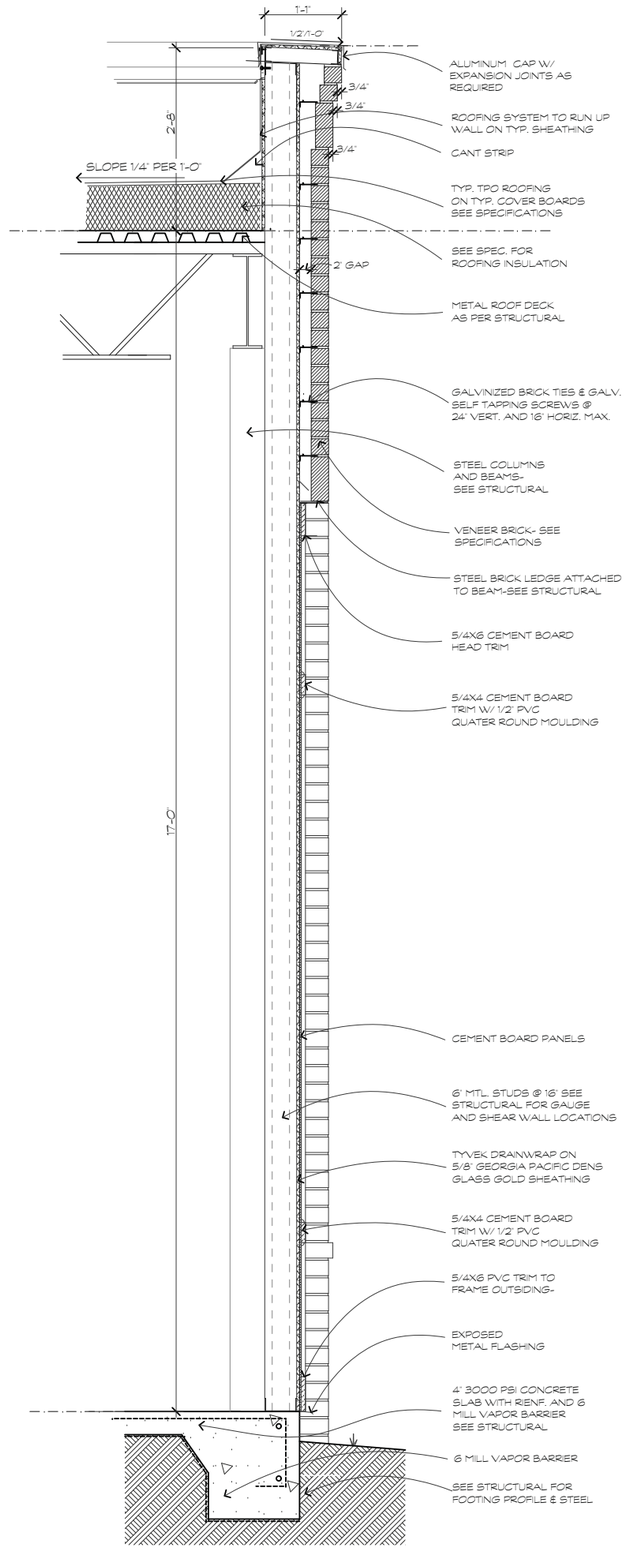

TYP. WALL SECTION

SCALE: 1"=1'-0"

2 / A-7

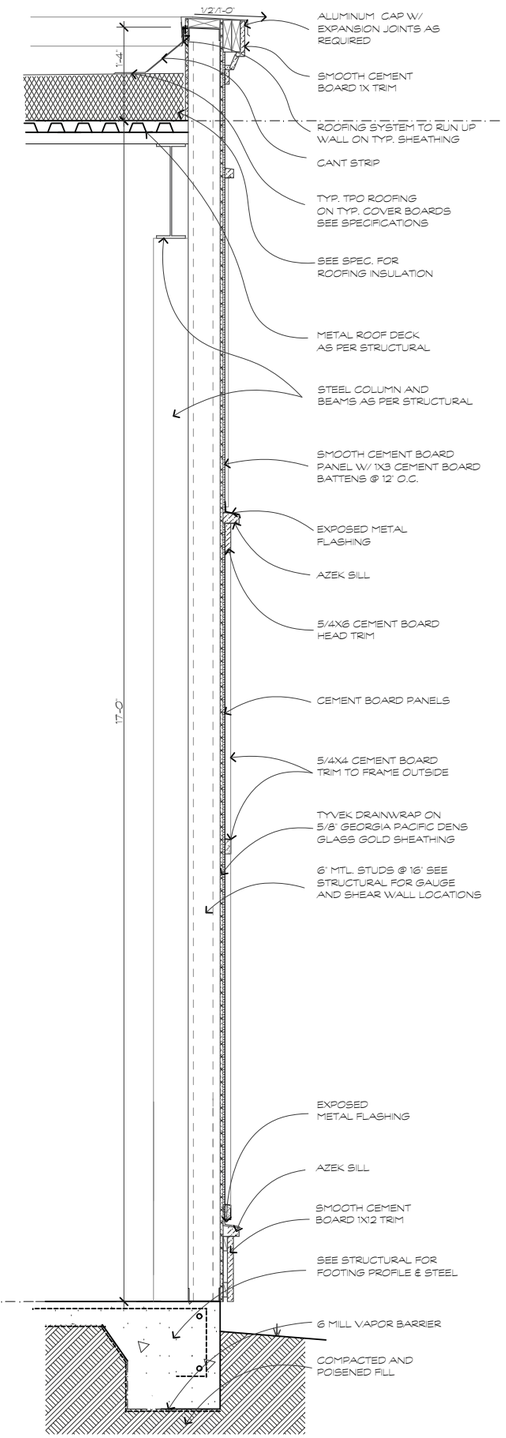

SIDE WALL SECTION

SCALE: 1"=1'-0"

3 / A-7

pdg ARCHITECTS
parkerdesigngroup architects
843.785.5571 POST OFFICE BOX 5200 HILTON HEAD ISLAND SC 29938

These documents & designs are the property of Parker Design Group | Architects & are not to be used or reproduced there of or for designs, working drawings, or construction of buildingswithout the written authorization from the copy write owner PDG|Architects 2016 copyright C

A NEW BUILDING SHELL FOR:

TENANT SPACE 1 & 2. TALBOTS, & FABRIK

Towne Center @ Shelter Cove
Hilton Head Island, S.C.

REVISIONS	

DRAWN BY	TP
CHECKED BY	TP
DATE OF ISSUE:	08/29/16
SCALE	
JOB NO.	1614
SHEET	A-7
OF	SHEETS

ARTISTIC RENDERING- NOT FOR REFERENCE

A NEW SHELL FOR BUILDING FOR SPARTINA 449

INDEX OF DRAWINGS:

ARCHITECTURAL:

C-0 TITLE SHEET
A-1 FLOOR PLAN
A-2 ROOF PLAN AND DETAILS
A-3 ELEVATIONS
A-4 ELEVATION AND BUILDING SECTION
A-5 WALL SECTIONS
A-6 WALL SECTIONS

DESIGN CRITERIA

DESCRIPTON:

1 STORY RED STEEL FRAME ON SPREAD FOOTINGS, EXTERIOR WALLS ARE METAL STUD & GYPSUM SHEATHING W/ BRICK AND CEMENT BOARD SIDING. CONCRETE SLAB, METAL BAR JOIST ROOF W/ TPO AND METAL STANDING SEAMED ROOFING

Design Criteria for Code Compliance as of: 2012 IBC

Type of Construction: 2
Sprinkler: YES ~~Protected~~/Unprotected
Occupancy: MERCANTILE

ALLOWABLE BUILDING AREAS (Table 503):

Building Floor Areas	Actual	Allowed
Mercantile	4,005 sqft	12,500 sqft

ALLOWABLE HEIGHTS (Table 503):

	Actual	Allowed
Building Height Above Grade:	32-0"	40.0'
Building Height in Stories:	1	2

pdg ARCHITECTS
parkerdesigngrouparchitects
843.785.5571 POST OFFICE BOX 5000 HILTON HEAD ISLAND, SC 29938

These documents & designs are the property of Parker Design Group | Architects & are not to be used or reproduced there of or for designs, working drawings, or construction of buildingswithout the written authorization from the copy write owner PDG|Architects 2016 copyright C

A NEW BUILDING SHELL:
SPARTINA
Towne Center @ Shelter Cove
Hilton Head Island, S.C.

REVISIONS	

DRAWN BY: TP
CHECKED BY: TP
DATE OF ISSUE: 07/22/16
SCALE:
JOB NO. 1614
SHEET
C.0
OF SHEETS

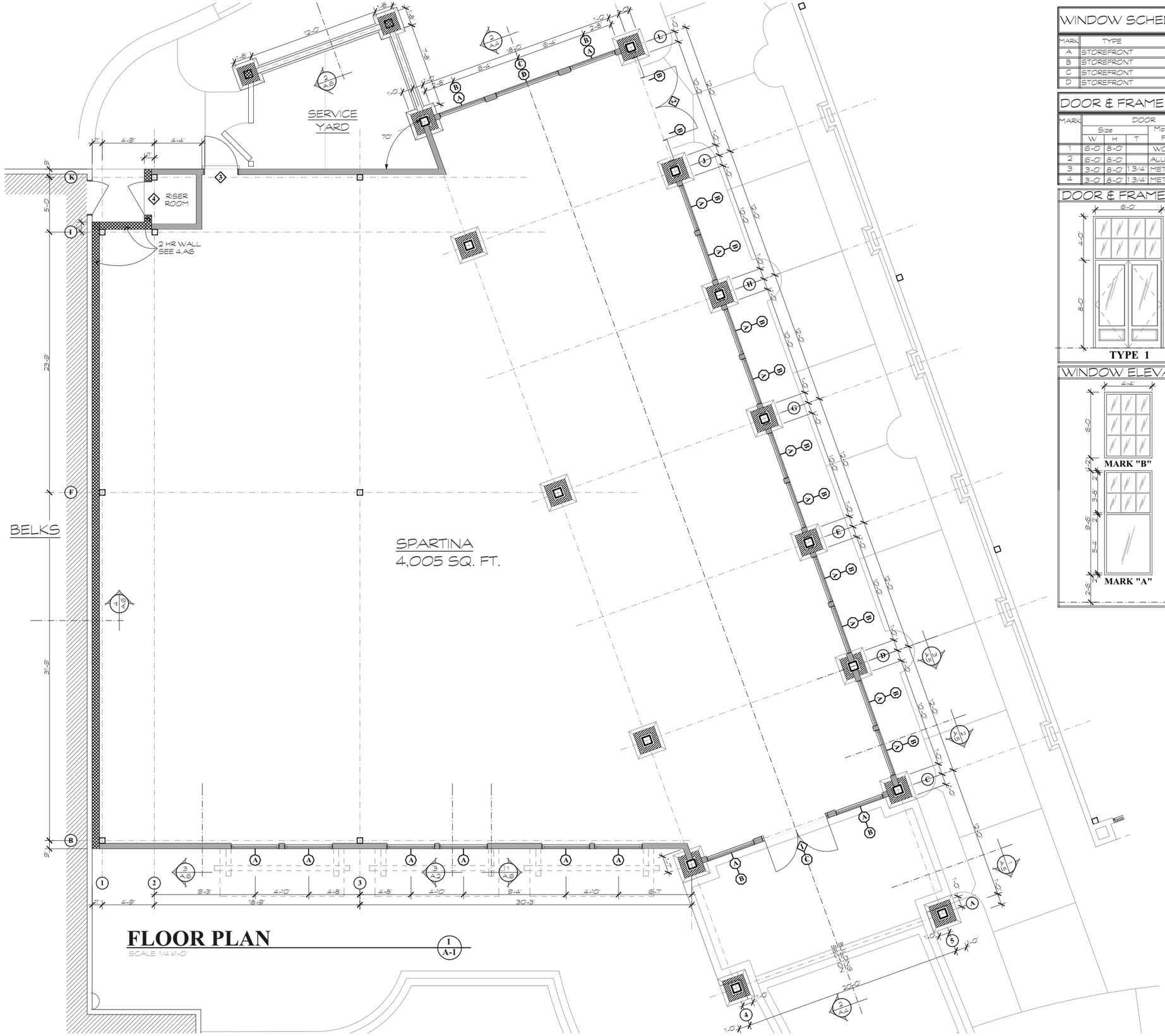

FLOOR PLAN

SCALE: 1/4"=1'-0"

1 A-1

WINDOW SCHEDULE

1. ALL GLAZING TO T CLEAR LOW 'E'
2. ALL STOREFRONT OPENINGS SHALL RECEIVE A CORRUGATED GALV. STEEL STORE PANEL SYSTEM W/ PERMANENT EXTRUDED ALUM. TRACK SYSTEM BY EASTERN METAL SUPPLY OR EQ. HURRICANE PANEL.

MARK	TYPE	MFG. NUMBER	SIZE	REMARKS
A	STOREFRONT	KAWNEER 451	4'-4"X9'-6"	
B	STOREFRONT	KAWNEER 451	4'-4"X6'-0"	
C	STOREFRONT	KAWNEER 451	6'-4"X6'-0"	
D	STOREFRONT	KAWNEER 451	6'-4"X9'-6"	

DOOR & FRAME SCHEDULE

NOTE
1. PROVIDE TEMPERED GLASS NOTED IN ELEV. KEYS

MARK	DOOR					FRAME			REMARKS
	Size			Material / Finish	Type	Manuf.	Mat.	FIRE RATING	
	W	H	T						
1	6'-0"	8'-0"		WOOD	1		ALUM.	NA	SELECTED BY OWNER
2	6'-0"	8'-0"		ALUM.	2	KAWNEER	ALUM.	NA	
3	3'-0"	8'-0"	1 3/4"	METAL	3		METAL	NA	
4	3'-0"	8'-0"	1 3/4"	METAL	3		METAL	NA	

DOOR & FRAME ELEVATION KEYS

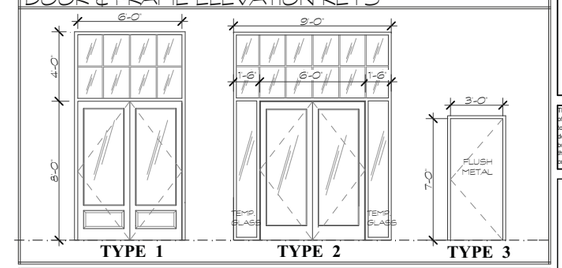

WINDOW ELEVATIONS

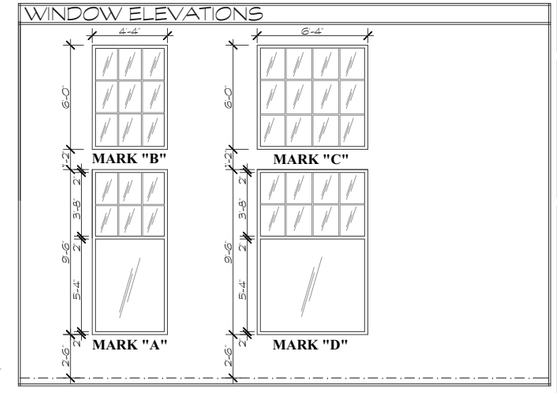

parkerdesigngroup architects
843.785.5171 POST OFFICE BOX 5200 HILTON HEAD ISLAND SC 29938

These documents & designs are the property of Parker Design Group | Architects & are not to be used or reproduced there of or for designs, working drawings, or construction of buildingswithout the written authorization from the copy write owner PDG|Architects 2016 copyright C

A NEW BUILDING SHELL:
SPARTINA
Towne Center @ Shelter Cove
Hilton Head Island, S.C.

REVISIONS	

DRAWN BY:	TP
CHECKED BY:	TP
DATE OF ISSUE:	07/22/16
SCALE	
JOB NO.	1614
SHEET	A-1
OF	SHEETS

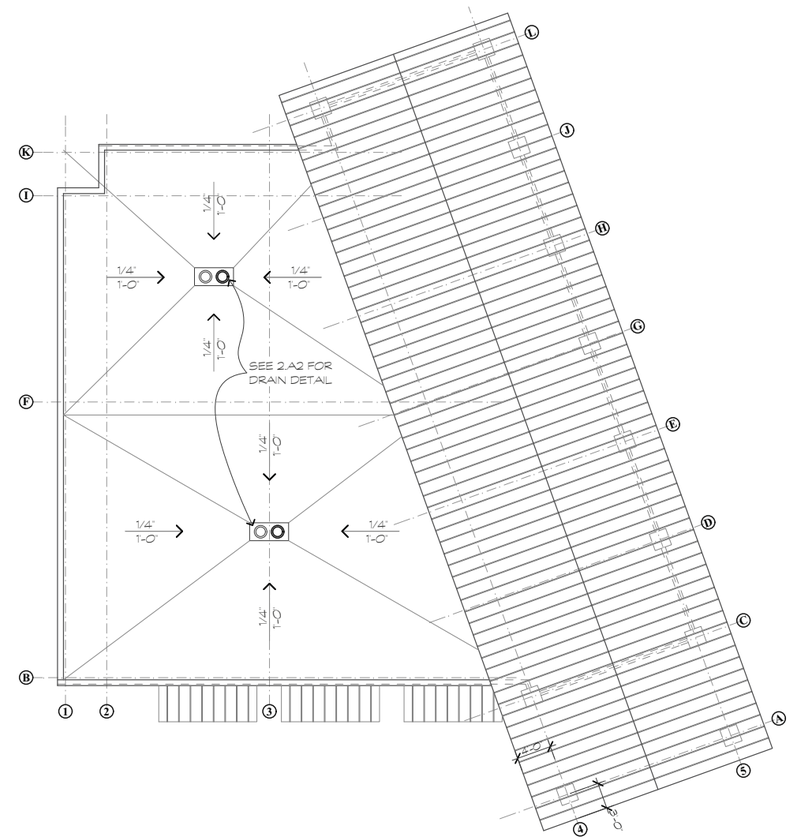

ROOF PLAN

SCALE: 1/8"=1'-0"

1
A-2

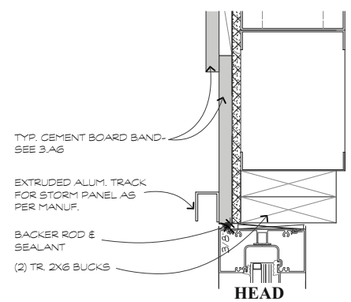

HEAD

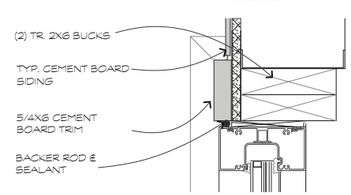

JAMB

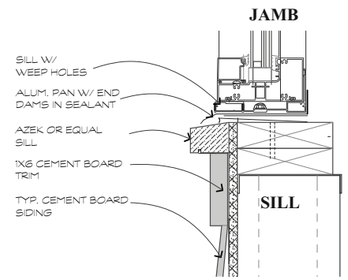

SILL

WINDOW DETAIL

SCALE: 3"=1'-0"

3
A-2

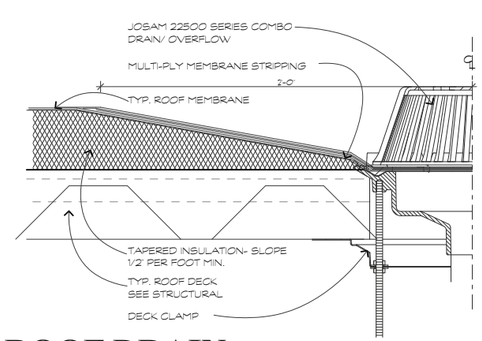

ROOF DRAIN

SCALE: 3"=1'-0"

2
A-2

parkerdesigngrouparchitects
843.785.5571 POST OFFICE BOX 5000 HILTON HEAD ISLAND, SC 29938
pdg ARCHITECTS

These documents & designs are the property of Parker Design Group | Architects & are not to be used or reproduced there of or for designs, working drawings, or construction of buildingswithout the written authorization from the copy write owner PDG|Architects 2016 copyright C

A NEW BUILDING SHELL:
SPARTINA
Towne Center @ Shelter Cove
Hilton Head Island, S.C.

REVISIONS	

DRAWN BY
TP
CHECKED BY
TP
DATE OF ISSUE:
07/22/16
SCALE
JOB NO.
1614
SHEET
A-2
OF SHEETS

FRONT ELEVATION

SCALE: 1/4"=1'-0"

1
A-3

RIGHT SIDE ELEVATION

SCALE: 1/4"=1'-0"

2
A-3

pdg parkerdesigngroup architects
843.785.5571 POST OFFICE BOX 5200 HILTON HEAD ISLAND SC 29938

These documents & designs are the property of Parker Design Group | Architects & are not to be used or reproduced there of or for designs, working drawings, or construction of buildingswithout the written authorization from the copy write owner PDG|Architects 2016 copyright C

A NEW BUILDING SHELL:
SPARTINA
Towne Center @ Shelter Cove
Hilton Head Island, S.C.

REVISIONS	

DRAWN BY: TP
CHECKED BY: TP
DATE OF ISSUE: 07/22/16
SCALE
JOB NO. 1614
SHEET
A-3
OF SHEETS

REAR ELEVATION

SCALE: 1/4"=1'-0"

1
A-4

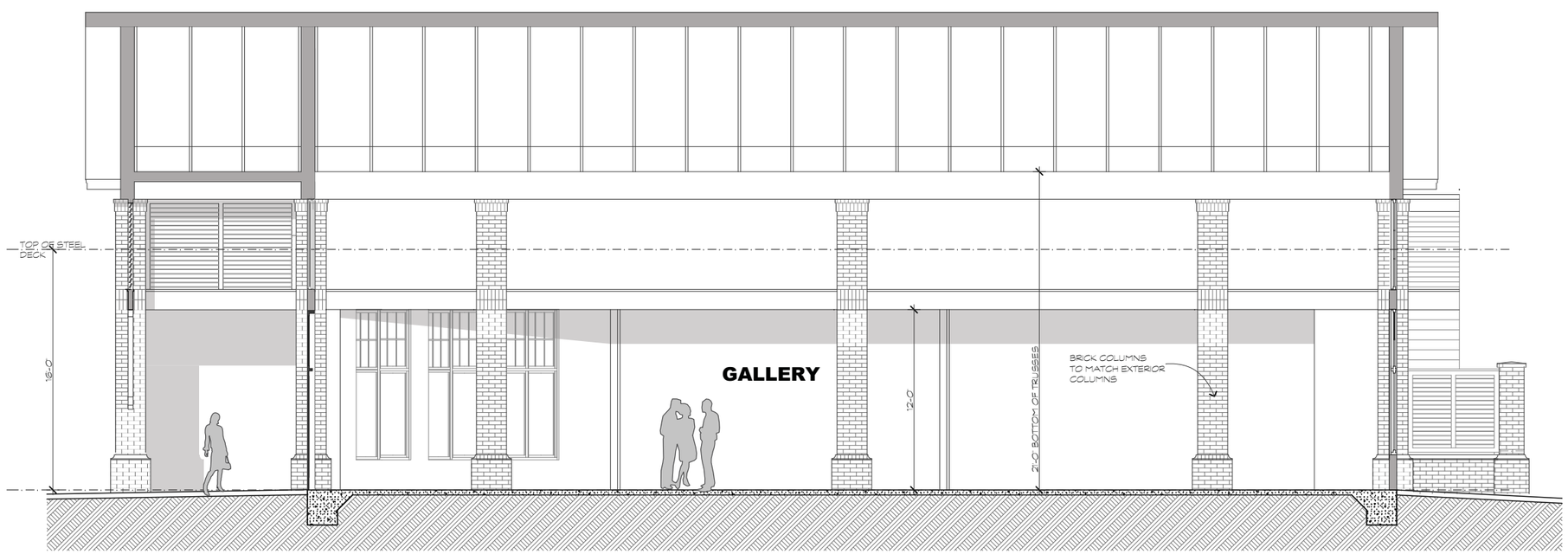

BUILDING SECTION

SCALE: 1/4"=1'-0"

2
A-4

parkerdesigngroup architects
843.785.5571 POST OFFICE BOX 5200 HILTON HEAD ISLAND, SC 29938

These documents & designs are the property of Parker Design Group | Architects & are not to be used or reproduced there of or for designs, working drawings, or construction of buildingswithout the written authorization from the copy write owner PDG|Architects 2016 copyright C

A NEW BUILDING SHELL:
SPARTINA
Towne Center @ Shelter Cove
Hilton Head Island, S.C.

REVISIONS	

DRAWN BY: TP
CHECKED BY: TP
DATE OF ISSUE: 07/22/16
SCALE
JOB NO. 1614
SHEET
A-4
OF SHEETS

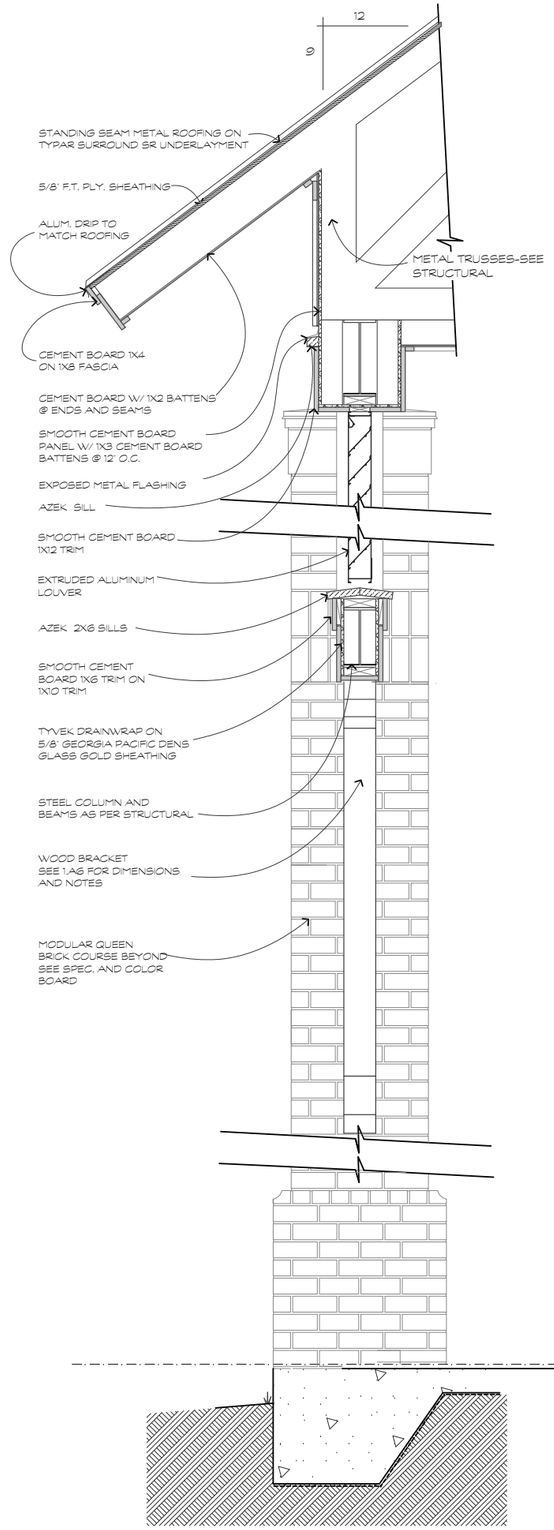

CANOPY SECTION

SCALE: 1"=1'-0"

1 A-5

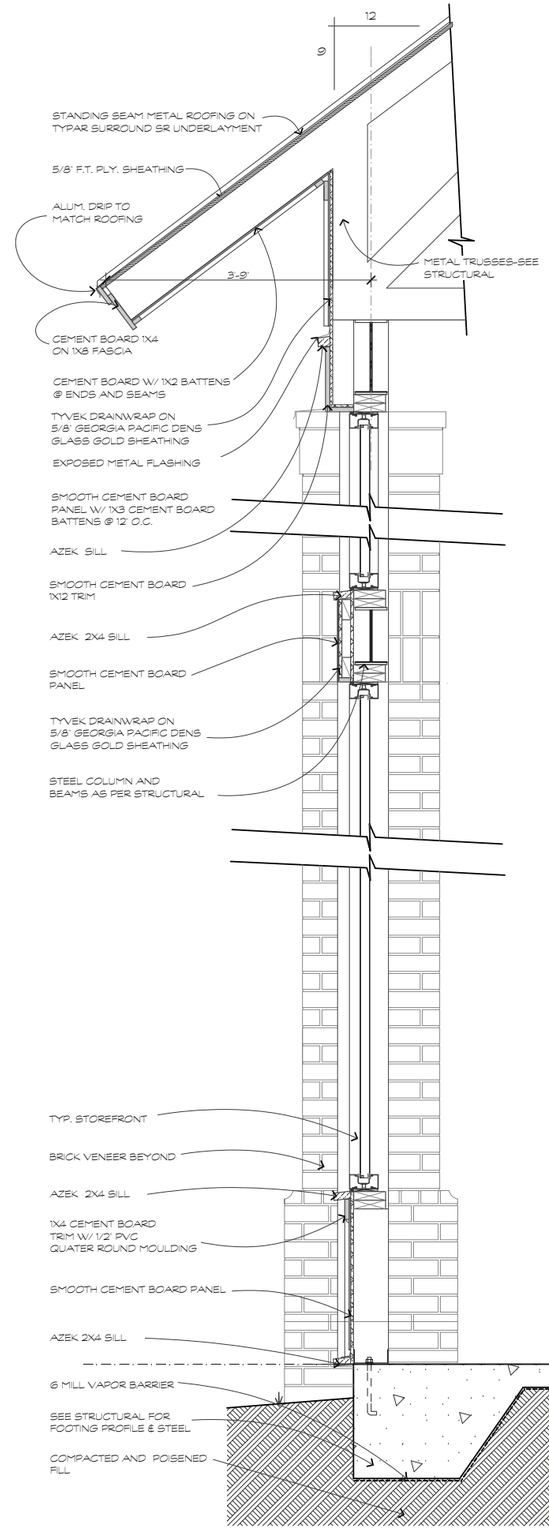

SIDE WALL SECTION

SCALE: 1"=1'-0"

2 A-5

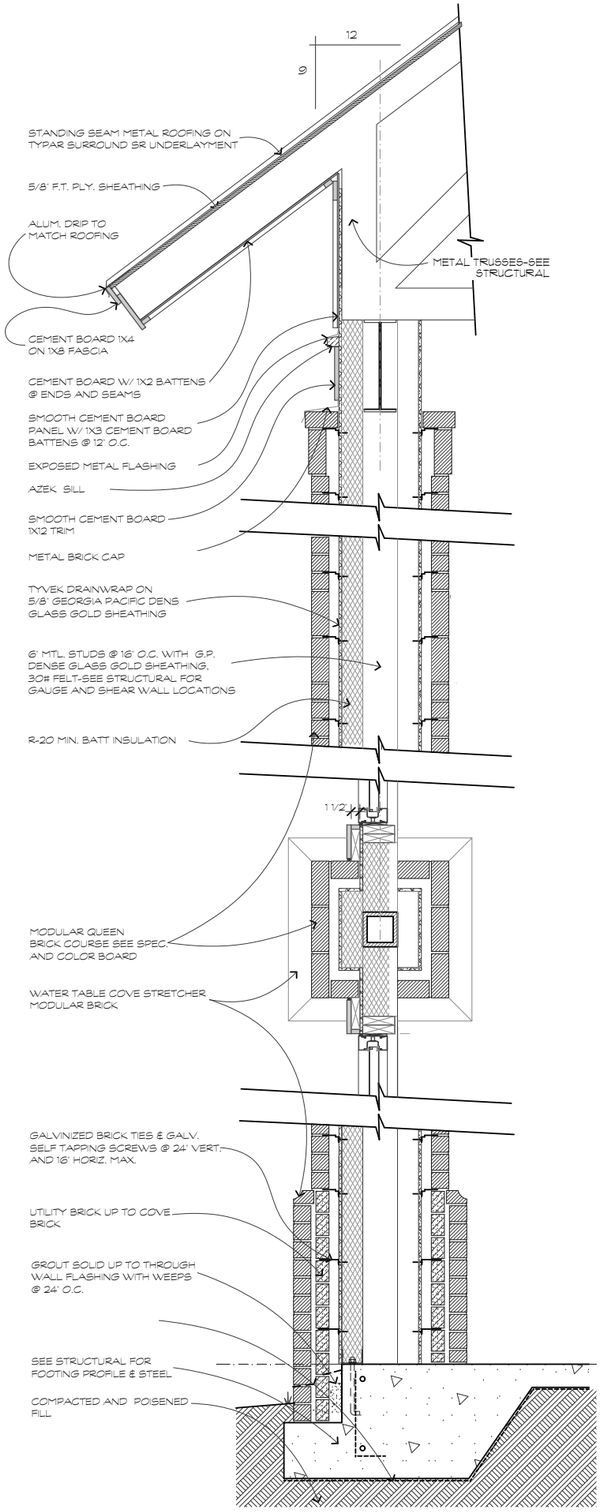

BRICK COLUMN SECTION

SCALE: 1"=1'-0"

3 A-5

pdg ARCHITECTS
parkerdesigngrouparchitects
843.785.5571 POST OFFICE BOX 5000 HILTON HEAD ISLAND SC 29938

These documents & designs are the property of Parker Design Group | Architects & are not to be used or reproduced there of or for designs, working drawings, or construction of buildingswithout the written authorization from the copy write owner PDG|Architects 2016 copyright C

A NEW BUILDING SHELL:
SPARTINA
Towne Center @ Shelter Cove
Hilton Head Island, S.C.

REVISIONS	

DRAWN BY:	TP
CHECKED BY:	TP
DATE OF ISSUE:	07/22/16
SCALE	
JOB NO.	1614
SHEET	A-5
OF	SHEETS

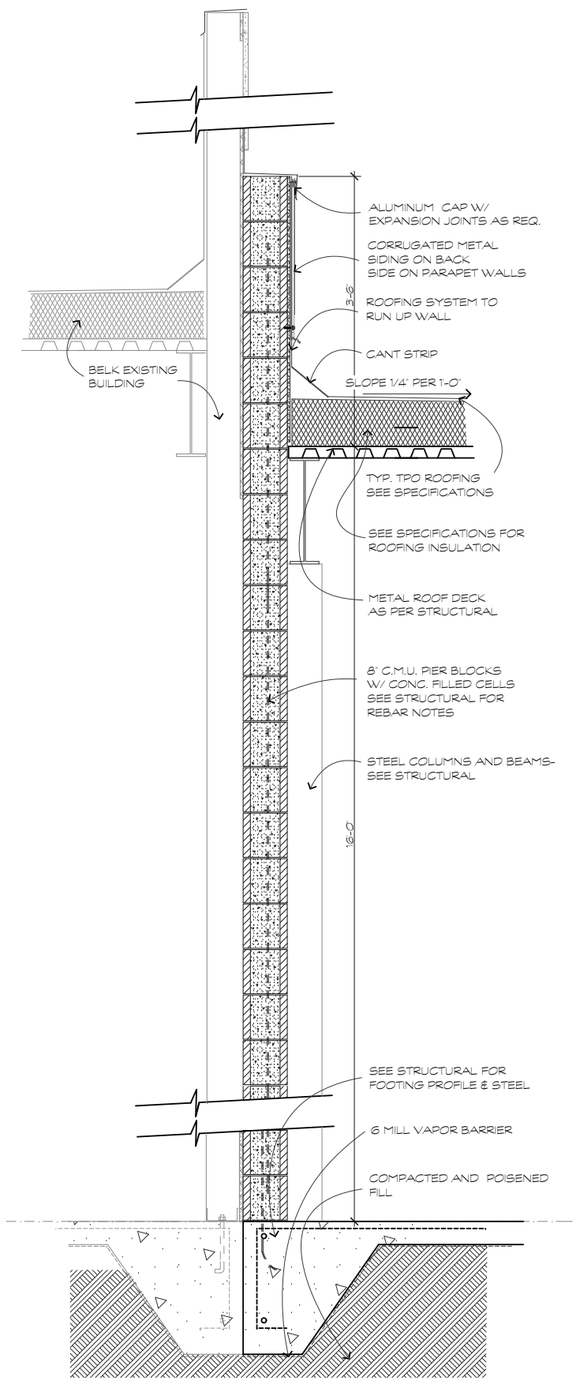

2 HR WALL SECTION

SCALE: 1"=1'-0"

4 / A-6

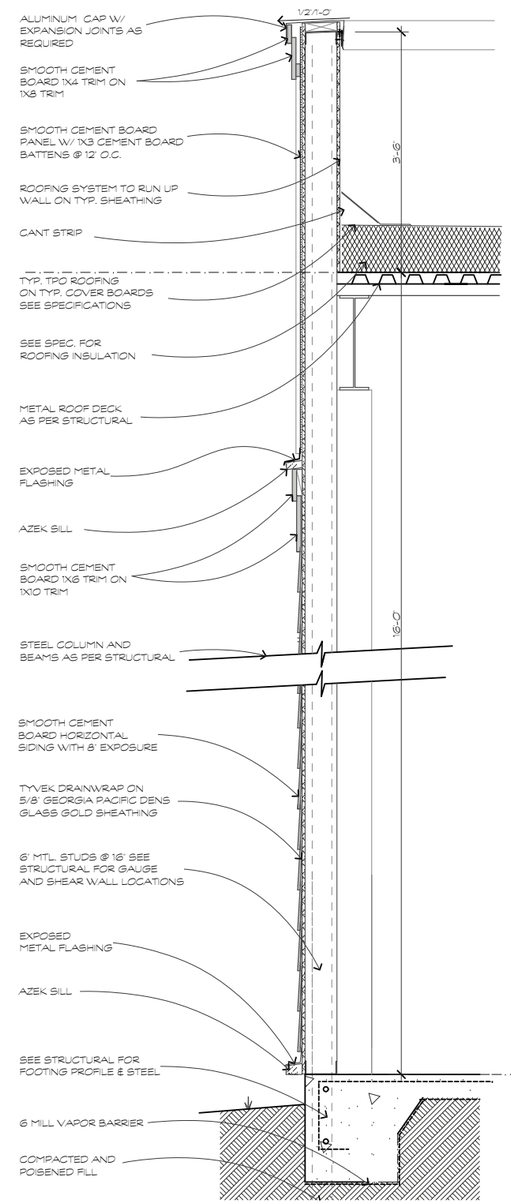

TYP. WALL SECTION

SCALE: 1"=1'-0"

3 / A-6

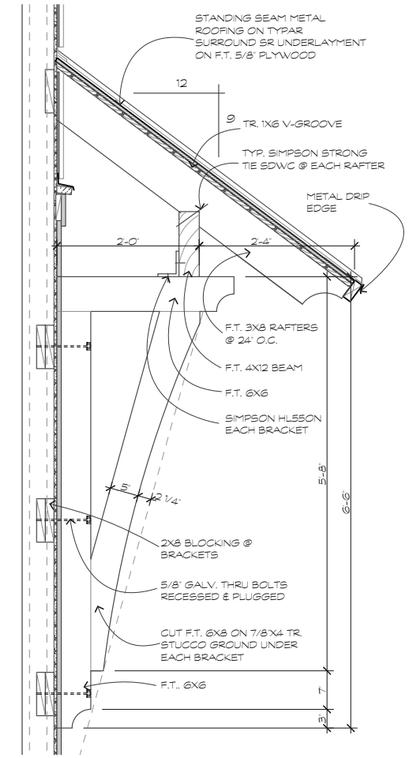

BRACKET DETAIL

SCALE: 1"=1'-0"

1 / A-6

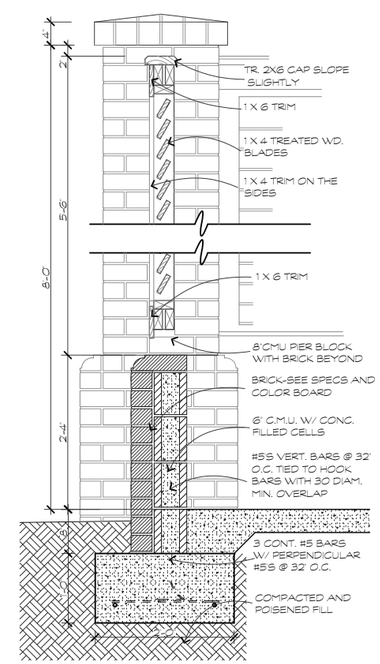

SERVICE YARD SECTION

SCALE: 1"=1'-0"

2 / A-6

pdg parkerdesigngroup architects
843.785.5571 POST OFFICE BOX 5200 HILTON HEAD ISLAND SC 29938

These documents & designs are the property of Parker Design Group | Architects & are not to be used or reproduced there of or for designs, working drawings, or construction of buildingswithout the written authorization from the copy write owner PDG|Architects 2016 copyright C

A NEW BUILDING SHELL:
SPARTINA
Towne Center @ Shelter Cove
Hilton Head Island, S.C.

REVISIONS	

DRAWN BY: TP
CHECKED BY: TP
DATE OF ISSUE: 07/22/16
SCALE:
JOB NO. 1614
SHEET
A-6
OF SHEETS

INSPIRATION PHOTO

STANDING SEAMED METAL ROOF,STOREFRONT, AND CEMENT BOARD PANELS
PAC CLAD/ KAWNEER SLATE GRAY

LOUVERS-
SW 6472 COMPOSED

TRIM AND SIDING-
SW 6148 WOOL SKEIN

SIDING-
SW 6150 UNIVERSAL KHAKI

BRICK-
BORAL SPANISH MOSS

SPARTINA COLORS

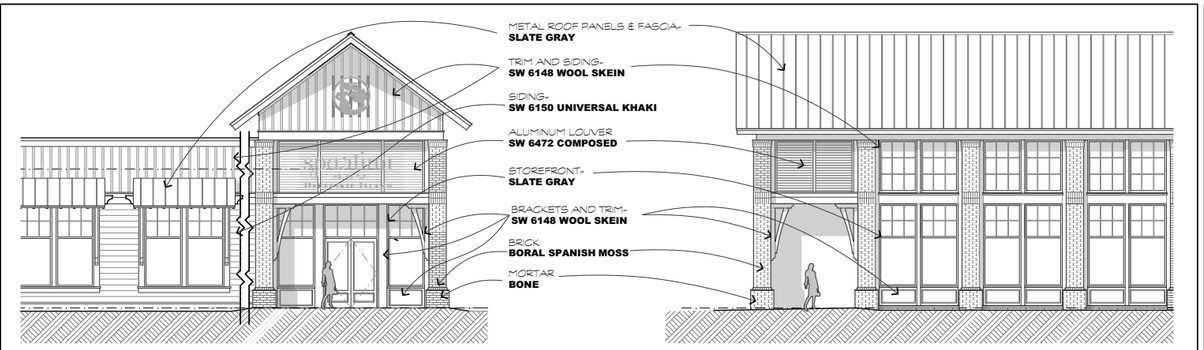

SPARTINA COLOR BOARD

INSPIRATION PHOTO

STANDING SEAMED METAL ROOF AND STOREFRONT
PAC CLAD/ KAWNEER DARK BRONZE

STUCCO-
DRYVIT 103 NATURAL WHITE

STUCCO-
DRYVIT 104 DOVER SKY

STUCCO-
DRYVIT 614 SMOKE SIGNAL

BRICK-
BORAL SUTTERS MILL CREST

HORIZONTAL SIDING-
SW 7020 BLACK FOX

TENENT SPACE 1 & 2 COLORS

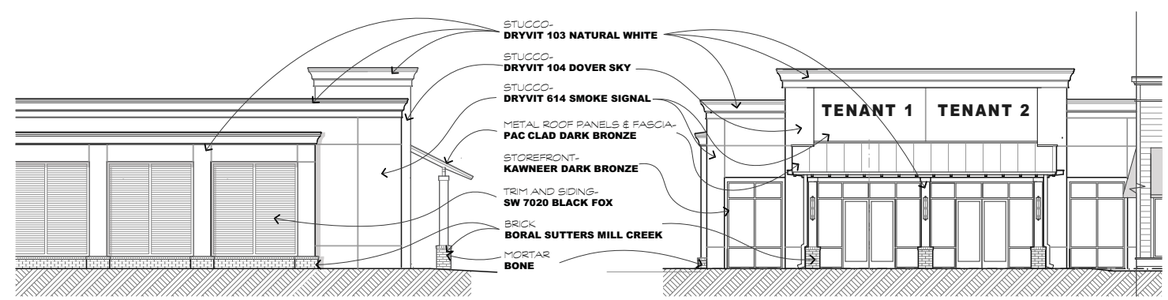

TENENT SPACE 1 & 2 COLOR BOARD

INSPIRATION PHOTO

AWNING FABRIC
JOCKEY RED

SIDING-
SW 6098 PACER WHITE

ENTRY DOOR-
BM CUSTOM MIX RED

BRICK-
BORAL SUTTERS MILL CREEK

TALBOTS COLORS

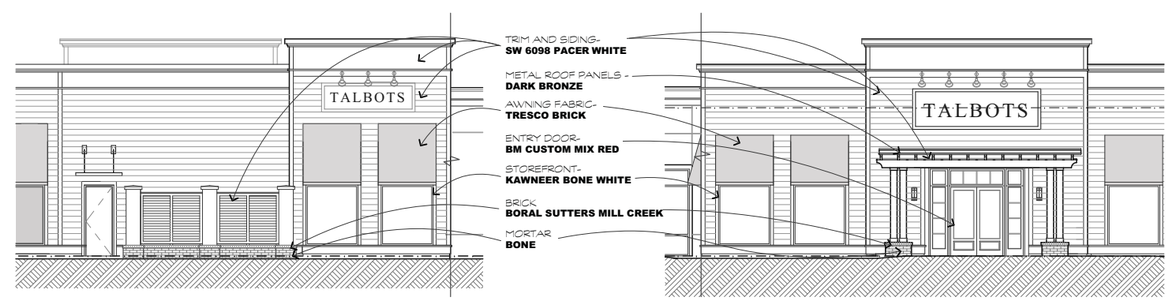

TALBOTS COLOR BOARD

INSPIRATION PHOTO

STANDING SEAMED METAL ROOF
PAC CLAD/ KAWNEER MUSKET GRAY

STOREFRONT, AND CEMENT BOARD PANELS
PAC CLAD/ KAWNEER MATTE BLACK

SIDING-
SW 6098 PACER WHITE

BRICK-
BORAL SUTTERS MILL CREST

FAB'RIK COLORS

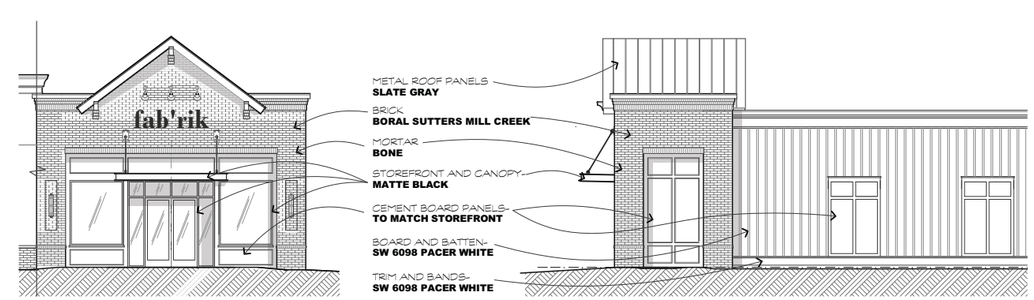

FAB'RIK COLOR BOARD

pdg parkerdesigngroup architects
843.785.5571 POST OFFICE BOX 5050 HILTON HEAD ISLAND SC 29938

These documents & designs are the property of Parker Design Group | Architects & are not to be used or reproduced there of or for designs, working drawings, or construction of buildingswithout the written authorization from the copy write owner PDG|Architects 2016 copyright C

A NEW BUILDING SHELL FOR:
TENANT SPACE 1 & 2,
TALBOTS, & FABRIK
Towne Center @ Shelter Cove
Hilton Head Island, S.C.

REVISIONS	

DRAWN BY	TP
CHECKED BY	TP
DATE OF ISSUE:	08/29/16
SCALE	
JOB NO.	1614
SHEET	
OF	SHEETS

DESIGN TEAM/DRB COMMENT SHEET

The comments below are staff recommendations to the Design Review Board (DRB) and do NOT constitute DRB approval or denial.

PROJECT NAME: Shelter Cove Towne Centre – ALTERATION/ADDITION DRB#: DRB-001734-2016

DATE: September 27, 2016

RECOMMENDATION: Approval ☐ Approval with Conditions ☒ Denial ☐

RECOMMENDED CONDITIONS:

1. Restudy color palette to be more in keeping with previously approved palette (less "white", "black", etc.).

ARCHITECTURAL DESIGN

DESIGN GUIDE/LMO CRITERIA	Complies Yes	No	Not Applicable	Comments or Conditions
Structure is designed to be appropriate to the neighborhood	☒	☐	☐	
Promotes pedestrian scale and circulation	☒	☐	☐	
Design is unobtrusive and set into the natural environment	☐	☐	☒	
Utilizes natural materials and colors	☒	☐	☐	
Avoids distinctive vernacular styles	☒	☐	☐	
Design is appropriate for its use	☒	☐	☐	
All facades are have equal design characteristics	☒	☐	☐	
Avoids monotonous planes or unrelieved repetition	☒	☐	☐	
Has a strong roof form with enough variety to provide visual interest	☒	☐	☐	
Minimum roof pitch of 6/12	☐	☒	☐	
Overhangs are sufficient for the façade height.	☒	☐	☐	
Forms an details are sufficient to reduce the mass of the structure	☒	☐	☐	
Human scale is achieved by the use of proper proportions	☒	☐	☐	

and architectural elements				
Utilizes a variety of materials, textures and colors	☒	☐	☐	
Incorporates wood or wood simulating materials	☒	☐	☐	
Windows are in proportion to the facade	☒	☐	☐	
Details are clean, simple and appropriate while avoiding excessive ornamentation	☒	☐	☐	
Utilities and equipment are concealed from view	☒	☐	☐	
Decorative lighting is limited and low wattage and adds to the visual character	☒	☐	☐	
Accessory elements are design to coordinate with the primary structure	☒	☐	☐	

LANDSCAPE DESIGN

DESIGN GUIDE/LMO CRITERIA	Complies Yes	No	Not Applicable	Comments or Conditions
Treats the Landscape as a major element of the project	☒	☐	☐	
Provides Landscaping of a scope and size that is in proportion to the scale of the development	☒	☐	☐	
Landscape is designed so that it may be maintained in its natural shape and size	☒	☐	☐	
Preserves a variety of existing native trees and shrubs	☒	☐	☐	
Provides for a harmonious setting for the site's structures, parking areas or other construction	☒	☐	☐	
Location of existing trees and new trees provides street buffers, mitigation for parking lots, and an architectural complement that visually mitigates between parking lots and building(s)	☒	☐	☐	
Shrubs are selected to complement the natural setting, provide visual interest and screen less desirable elements of the project	☒	☐	☐	
A variety of species is selected for texture and color	☒	☐	☐	
Provides overall order and continuity of the Landscape plan	☒	☐	☐	
Native plants or plants that have historically been prevalent on the Island are utilized	☒	☐	☐	
A variety of sizes is selected to create a "layered" appearance for visual interest and a sense of depth	☒	☐	☐	
The location of existing mature trees is taken into account in placement of shrubs so as not to damage tree roots	☒	☐	☐	

Proper spacing and location for plants to reach their mature size and natural shape while avoiding excessive or unnatural pruning	☒	☐	☐	
Proposed groundcovers are evergreen species with low maintenance needs	☒	☐	☐	
Large grassed lawn areas encompassing a major portion of the site are avoided	☒	☐	☐	
The adjacent development is taken into account in determining the most appropriate buffer so as not to depart too dramatically from the neighborhood	☒	☐	☐	
Ornamentals and Annuals are limited to entrances and other focal points	☒	☐	☐	

NATURAL RESOURCE PROTECTION

DESIGN GUIDE/LMO CRITERIA	Complies Yes	No	Not Applicable	Comments or Conditions
An effort has been made to preserve existing trees and under story plants	☐	☐	☒	
Supplemental and replacement trees meet LMO requirements for size, species and number	☐	☐	☐	
Wetlands if present are avoided and the required buffers are maintained	☐	☐	☒	
Sand dunes if present are not disturbed	☐	☐	☒	

MISC COMMENTS/QUESTIONS

All of the tenant signs require separate sign permits. Staff suggests the tenants submit sign permit applications as soon as possible to work through any issues with the colors, locations or designs of the signs.

The Spartina 449 sign on the front elevation is separated into two signs: the mermaid logo and "Spartina 449 Daufuskie Island". The LMO only allows one sign on each side of a tenant space. To resolve this issue, staff suggests either removing the mermaid logo or integrating the mermaid into the design of the "Spartina 449 Daufuskie Island" portion of the sign.

The Town's Design Guide and Land Management Ordinance specify that signs are meant to identify a business and that signs should not be used for advertising. To that end, staff uses the following rule of thumb when reviewing sign permit applications: if a logo or graphic is adjacent to text, the size of the logo or graphic should be equal to or smaller than the size of the text. In short, the logo or graphic should be equal to or secondary to the business name. This ensures the primary purpose of the sign is to identify the business, as opposed to advertising a brand.

In the Spartina 449 sign on the rear elevation, the logo is actually taller than the stacked text, making it a primary element of the sign. To resolve this issue, staff suggests reducing the size of the logo to match the height of the stacked letters.

The Site Plan does not show the Finish Floor Elevation. Ensure the FFE is above A7-15.

Town of Hilton Head Island

Community Development Department
One Town Center Court
Hilton Head Island, SC 29928
Phone: 843-341-4757 Fax: 843-842-8908
www.hiltonheadislandsc.gov

FOR OFFICIAL USE ONLY
Date Received: _____
Accepted by: _____
DRB #: _____
Meeting Date: _____

Applicant/Agent Name: Thomas Michaels Company: T. Michaels Architect
Mailing Address: PO BOX 58 City: Port Royal State: SC Zip: 29935
Telephone: 843.252.2454 Fax: n/a E-mail: thomas@tmichaelsarchitect.com
Project Name: WestIn Hotel - Pavilion Redevelopment Project Address: 2 Grasslawn Avenue
Parcel Number [PIN]: R 510 009 000 0892 0000 __ __ __ __ __ __ __ __ __
Zoning District: PD-1 Overlay District(s): TA-O

CORRIDOR REVIEW, MAJOR
DESIGN REVIEW BOARD (DRB) SUBMITTAL REQUIREMENTS

Digital Submissions may be accepted via e-mail by calling 843-341-4757.

Project Category:

_____ Concept Approval – Proposed Development
__✓__ Final Approval – Proposed Development
_____ Alteration/Addition
_____ Sign

Submittal Requirements for ***All*** projects:

_____ Private Architectural Review Board (ARB) Notice of Action (if applicable): When a project is within the jurisdiction of an ARB, the applicant shall submit such ARB's written notice of action per LMO Section 16-2-103.I.4.b.iii.01. Submitting an application to the ARB to meet this requirement is the responsibility of the applicant.

__✓__ Filing Fee: Concept Approval-Proposed Development $175, Final Approval – Proposed Development $175, Alterations/Additions $100, Signs $25; cash or check made payable to the Town of Hilton Head Island.

Additional Submittal Requirements:
Concept Approval – Proposed Development

_____ A survey (1"=30' minimum scale) of property lines, existing topography and the location of trees meeting the tree protection regulations of Sec. 16-6-104.C.2, and if applicable, location of bordering streets, marshes and beaches.
_____ A site analysis study to include specimen trees, access, significant topography, wetlands, buffers, setbacks, views, orientation and other site features that may influence design.
_____ A draft written narrative describing the design intent of the project, its goals and objectives and how it reflects the site analysis results.
_____ Context photographs of neighboring uses and architectural styles.
_____ Conceptual site plan (to scale) showing proposed location of new structures, parking areas and landscaping.
_____ Conceptual sketches of primary exterior elevations showing architectural character of the proposed development, materials, colors, shadow lines and landscaping.

Additional Submittal Requirements:

Final Approval – Proposed Development

__✓__ A final written narrative describing how the project conforms with the conceptual approval and design review guidelines of Sec. 16-3-106.F.3.

__✓__ Final site development plan meeting the requirements of Appendix D: D-6.F.

__✓__ Final site lighting and landscaping plans meeting the requirements of Appendix D: D-6.H and D-6.I.

__✓__ Final floor plans and elevation drawings (1/8"=1'-0" minimum scale) showing exterior building materials and colors with architectural sections and details to adequately describe the project.

__✓__ A color board (11"x17" maximum) containing actual color samples of all exterior finishes, keyed to the elevations, and indicating the manufacturer's name and color designation.

_____ Any additional information requested by the Design Review Board at the time of concept approval, such as scale model or color renderings, that the Board finds necessary in order to act on a final application.

Additional Submittal Requirements:

Alterations/Additions

_____ All of the materials required for final approval of proposed development as listed above, plus the following additional materials.

_____ A survey (1"=30' minimum scale) of property lines, existing topography and the location of trees meeting the tree protection regulations of Sec. 16-6-104.C.2, and if applicable, location of bordering streets, marshes and beaches.

_____ Photographs of existing structure.

Additional Submittal Requirements:

Signs

_____ Accurate color rendering of sign showing dimensions, type of lettering, materials and actual color samples.

For freestanding signs:

_____ Site plan (1”=30’ minimum scale) showing location of sign in relation to buildings, parking, existing signs, and property lines.

_____ Proposed landscaping plan.

For wall signs:

_____ Photograph or drawing of the building depicting the proposed location of the sign.

_____ Location, fixture type, and wattage of any proposed lighting.

Note: All application items must be received by the deadline date in order to be reviewed by the DRB per LMO Appendix D: D-23.

A representative for each agenda item is strongly encouraged to attend the meeting.

Are there recorded private covenants and/or restrictions that are contrary to, conflict with, or prohibit the proposed request? If yes, a copy of the private covenants and/or restrictions must be submitted with this application. ☐YES ☑NO

To the best of my knowledge, the information on this application and all additional documentation is true, factual, and complete. I hereby agree to abide by all conditions of any approvals granted by the Town of Hilton Head Island. I understand that such conditions shall apply to the subject property only and are a right or obligation transferable by sale.

I further understand that in the event of a State of Emergency due to a Disaster, the review and approval times set forth in the Land Management Ordinance may be suspended.

SIGNATURE

July 26, 2016

DATE

Town of Hilton Head Island Final DRB Project Narrative

WESTIN HOTEL – Pavilion Redevelopment

2 Grasslawn Avenue, Hilton Head Island, SC 29928

July 25, 2016

Project Team

Civil Engineer

Greg Baisch, PE -
Ward Edwards Engineering -
843-683-0416 -
gbaisch@wardedwards.com -

Architect

Thomas Michaels -
T.Michaels Architect -
843-252-2454 -
thomas@tmichaelsarchitect.com -

Designer

David Sklar -
Sklar Design Ecotechture -
843-368-1284 -
sklarecodesign@gmail.com

Interior Designer

Kelly Caron, ASID, NCIDQ -
Kelly Caron Designs, ASID -
843-540-9759 -
kelly@kellycarondesigns.com -

Landscape Architect

Daniel P. Keefer, ASLA, ULI -
Witmer-Jones-Keefer, Ltd. -
843-290-5437 -
dan@wjkltd.com -

Owner

Westin (SCG Hilton Head Property, LLC) -
2 Grasslawn Ave / Hilton Head Island, SC -

Program

The Westin property has undergone a $30 million renovation commenced in February 2012. To compliment these renovations, the owner would like to improve the conference center event space. The existing event pavilion area is proposed to be renovated to increase the functionality of the space. The property (R510 009 000 0892 0000) is currently zoned PD-1 with a TA-O overlay.

Existing Conditions

The property is located at 2 Grasslawn Avenue adjacent to the Atlantic Ocean at the waterside of the Westin Hotel and Spa Resort on Hilton Head Island, South Carolina. The subject project area as shown on the as-built survey prepared by Atlas Surveying, covers approximately 10,350 square feet. The overall property is approximately 13.5 Acres and owned by SCG Hilton Head Property LLC. The project area is currently developed with an at grade covered pavilion, an attached porch walkway with exterior sidewalks, landscaping and concrete patio space. The proposed pavilion will have no net increase to

the existing impervious ratio and will be no closer to the OCRM line then existing site development. The renovations also remedy the condition where the existing pavilion is over the OCRM setback.

Architectural

The new pavilion will be designed with a raised pier foundation to bring the floor area above flood and match the level of the hotel. The building materials and finishes will be similar to that of the main hotel so the new construction compliments the existing. The design will satisfy the applicable ARB and DRB requirements. The following design criteria will be integrated in the pavilion:

- - The intended use for the building is for a four-season gathering space. It will be designed to be maintained as open most of the time.
- - A majority of the wall surface area which is not adjacent to the existing Westin building will be designed as operable.
- - Planters will be integrated into the design to allow for vegetation growth to soften the structure.
- - All fixtures and finishes will be specified as exterior grade as required for an open structure.
- - The design will integrate various shading and enclosure devices such as fabric canopies, trellises or louvers.
- - The design of the pavilion will include open air porches and decks on the beach side.

Access, Fire Protection & Emergency Access

The pavilion redevelopment will be accessed internally from the existing hotel facility. Fire Safety and emergency exterior access will continue to be provided from the south side of the hotel building. Fire protection services and calculations will be included in the plan approval process.

Tree Removal & Landscape Mitigation

The subject property includes existing native and naturalized plantings with limited lawn areas and sabal palmettos spread throughout. There are approximately 18 existing sabal palmettos on-site with a limited number being removed for site circulation improvements and construction activities. Sabal palmettos will be replanted to reduce the scale of the architecture and to blend with existing surrounding beach-front plantings. All proposed landscaping will be native or naturalized shrubs, groundcovers and grasses exclusively and any sod areas minimized to reduce irrigation dependency. Salt tolerant plantings will be emphasized due to harsh ocean front exposure of property. The landscape buffer, canopy trees, and masonry wall adjacent to the Barony Beach Club will be retained and enhanced with added buffering.

Utilities

Existing public utility services (electrical, communication, water and sewer services) are available for the subject parcel. The proposed addition will be internally served from the existing facility. Any exterior conflicts will be relocated as required.

Drainage

The existing site is fairly flat and currently developed. The proposed development will keep the impervious ratio less than the pre-existing conditions. The existing drainage patterns will be preserved with the development (roof drain collection to existing conveyance system).

Description:

AF200~300 series Aerofoil Sun Louvers are medium size sun louvers system.The spacing between panels,spacing between carriers and installation space decrease accordingly.The system can match well with other decorative material and control the sunshine very well.

The installation way is flexible,it has 3 ways: A) using supporting roller to fix the AF Panel, B) using supporting bracket to fix the AF panel, C) using supporting panel to fix the AF panel.

This system can also be used as fence, the panel can be small size, and the spacing between panel can be small.

Colors and surface: Anodised, PVDF spraying, or powder coating, RAL colors and woodgrain colors available.

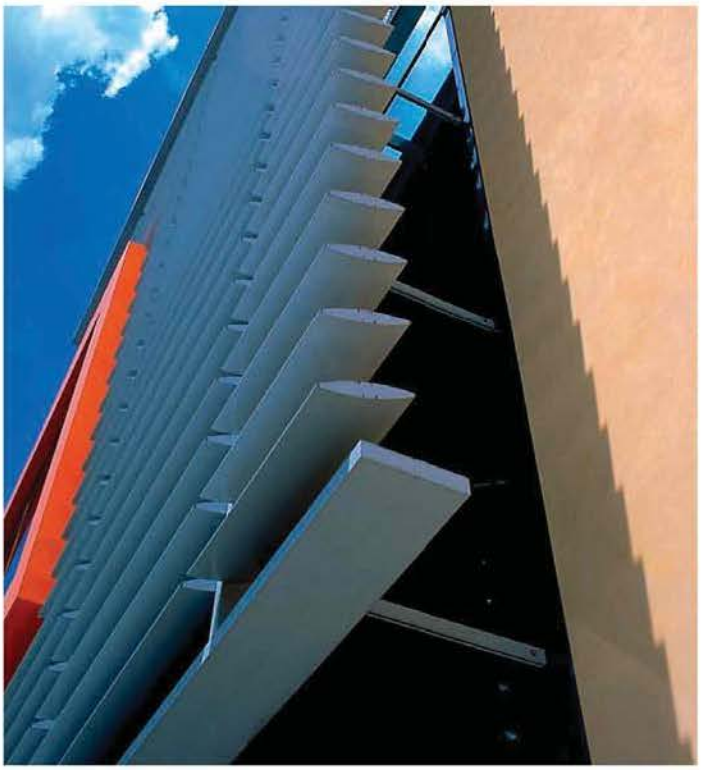

DX-AF300-1

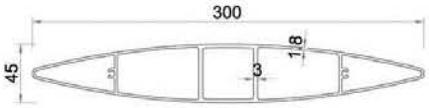

MATERIAL	THICKNESS	RECOMMENDED MAX. LENGTH		COLORS
	mm	m	ft	Various RAL and woodgrain colors available
Aluminum	1.8	4.8	15.75	

DX-AF300-2

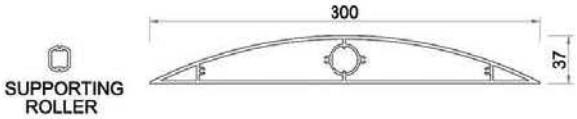

MATERIAL	THICKNESS	RECOMMENDED MAX. LENGTH		COLORS
	mm	m	ft	Various RAL and woodgrain colors available
Aluminum	2.5	4.8	15.75	

AEROFOIL DX–AF300/250/200

The AF series Aerofoil Sun Louvers can use the same installation structure of the existing decorative material.it's easy to install,and also reduce maximum material cost and installation cost.

DX-AF300-3

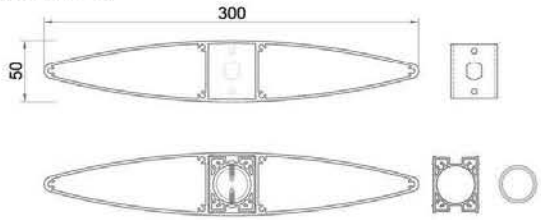

MATERIAL	THICKNESS	RECOMMENDED MAX. LENGTH		COLORS
	mm	m	ft	Various RAL and woodgrain colors available
Aluminum	2.5	4.8	15.75	

DX-AF250

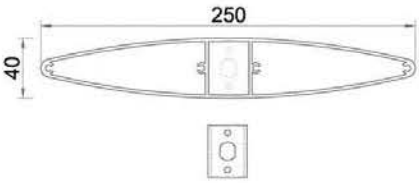

MATERIAL	THICKNESS	RECOMMENDED MAX. LENGTH		COLORS
	mm	m	ft	Various RAL and woodgrain colors available
Aluminum	2.0	4.2	13.78	

DX-AF200

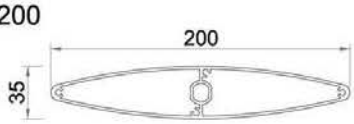

MATERIAL	THICKNESS	RECOMMENDED MAX. LENGTH		COLORS
	mm	m	ft	Various RAL and woodgrain colors available
Aluminum	1.5	3.5	11.48	

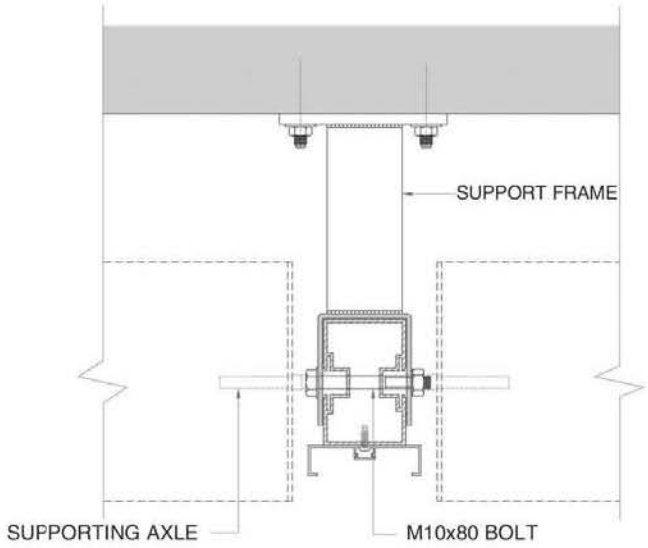

STRUCTURAL SECTION 1

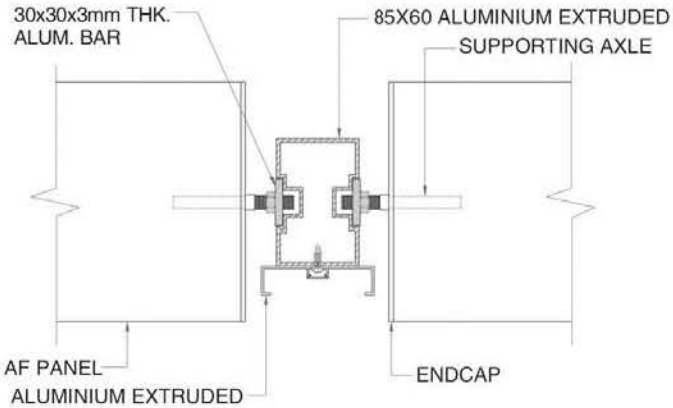

STRUCTURAL SECTION 2

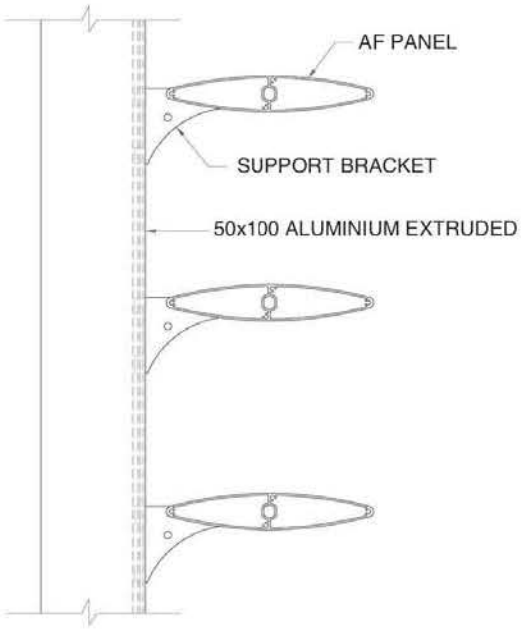

SIDE ELEVATION

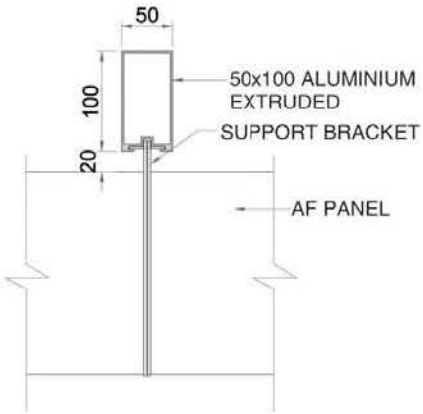

A–A SECTION

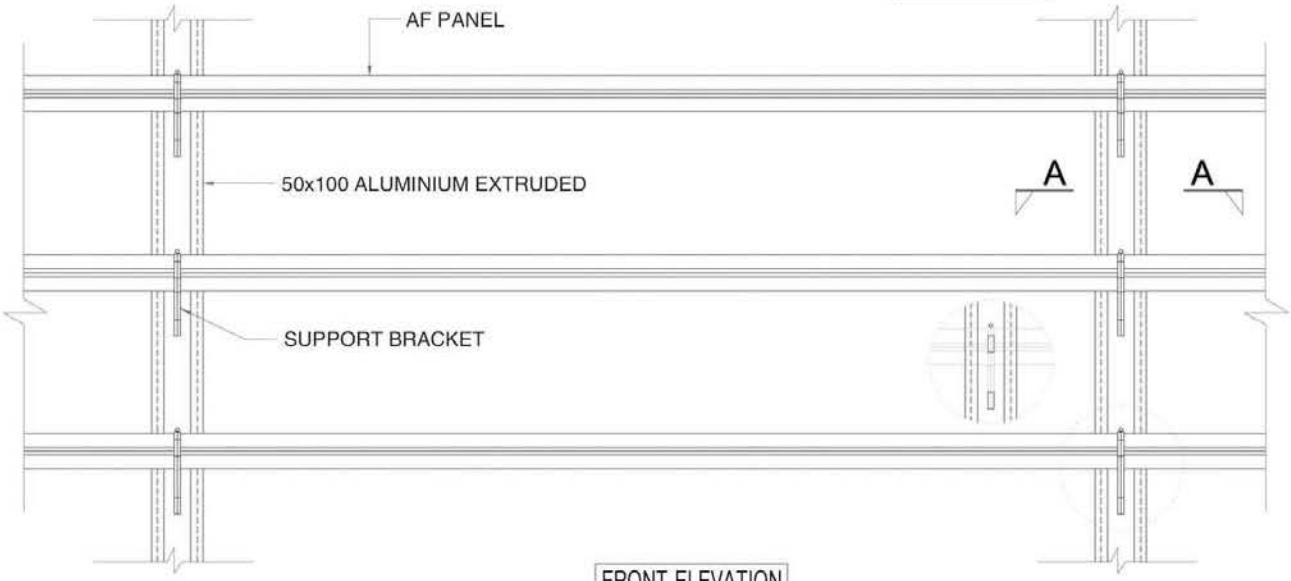

FRONT ELEVATION

AEROFOIL DX-AF300/250/200

AF series Aerofoil Sun Louvers are mainly in elliptic shape,other shapes can also be made according to customer's order, like trapezoidal, rhombic or other special design.The AF series of Aerofoil Sun Louvers can be curved,elliptic,or special corner treatment according to the decorative request and construction, it is supplied together with specially designed accessories.

DOUBLE
SOCKET

Existing Photographs:

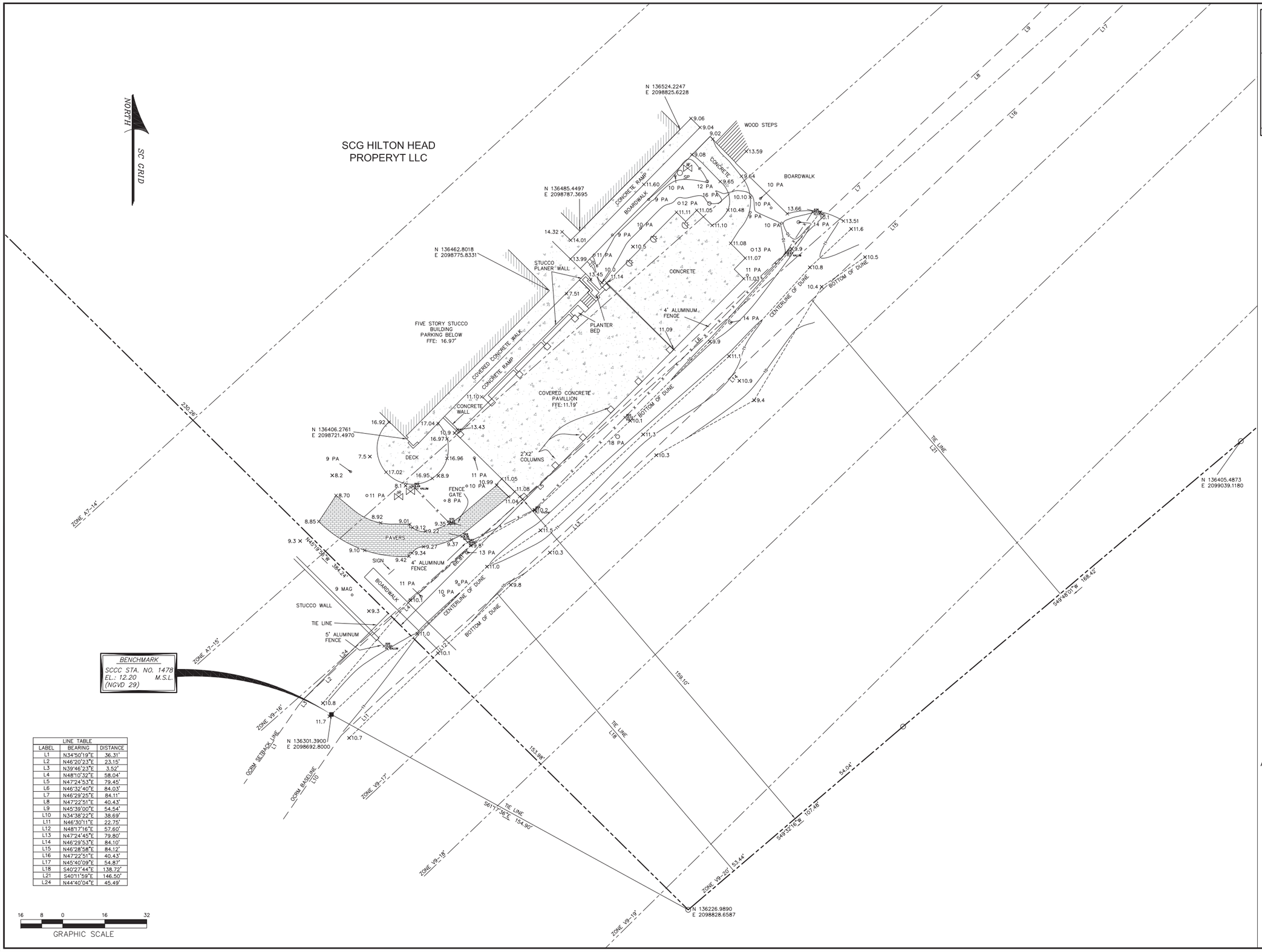

LINE TABLE		
LABEL	BEARING	DISTANCE
L1	N34°50'19"E	36.31'
L2	N46°20'23"E	23.15'
L3	N39°46'23"E	3.52'
L4	N48°10'32"E	58.04'
L5	N47°24'53"E	79.45'
L6	N46°32'40"E	84.03'
L7	N46°29'25"E	84.11'
L8	N47°22'51"E	40.43'
L9	N45°39'00"E	54.54'
L10	N34°38'22"E	38.69'
L11	N46°30'11"E	22.75'
L12	N48°17'16"E	57.60'
L13	N47°24'45"E	79.80'
L14	N46°29'53"E	84.10'
L15	N46°28'58"E	84.12'
L16	N47°22'51"E	40.43'
L17	N45°40'09"E	54.87'
L18	S40°27'44"E	138.72'
L21	S40°11'59"E	146.50'
L24	N44°40'04"E	45.49'

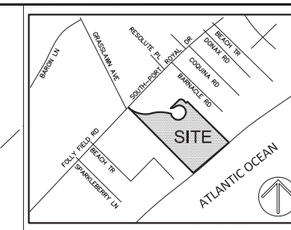

VICINITY MAP NOT TO SCALE

LEGEND

CMF ■	CONCRETE MONUMENT FOUND
	GROUND LIGHT
×16.5	SPOT ELEVATION
	WATER VALVE
MAG	MAGNOLIA
PA	PALMETTO
FFE	FINISHED FLOOR ELEVATION
OCRM	OCEAN COSTAL & RESOURCE MANAGEMENT
—16—	CONTOUR LINE

NOTES

1. THIS PARCEL APPEARS TO LIE IN FLOOD ZONES V9 & A7 (EL. VARIES), FIRM PANEL 0015–D COMMUNITY 450250.
2. CONTOURS ARE IN ONE FOOT INTERVALS. TREES SIZES SHOWN ARE IN INCHES OF DIAMETER.
3. ELEVATIONS ARE BASED ON NGVD 29 DATUM.
4. OCRM BASELINE AND SETBACK LINES TAKEN FROM SURVEYORS PACKAGE, DHEC–OCRM, HILTON HEAD ISLAND, 2009 NGS–1983.
5. SOUTH CAROLINA COASTAL COUNCIL MONUMENTS USED:
   STATION No. 1477
   STATION No. 1478
6. THE LONG–TERM SHORELINE CHANGE RATES (LOCAL EROSION RATE) FOR MONUMENT 1477 & 1478 ARE S/A (STABLE TO ACCRETIONAL SHORELINE).
7. SOME OR ALL AREAS ON THIS PLAT ARE FLOOD HAZARD AREAS AND HAVE BEEN IDENTIFIED AS HAVING AT LEAST A ONE PERCENT CHANCE OF BEING FLOODED IN ANY GIVEN YEAR BY RISING TIDAL WATERS ASSOCIATED WITH POSIBLE HURRICANES. LOCAL REGULATIONS REQUIRE THAT CERTAIN FLOOR HAZARD PROTECTIVE MEASURES BE INCORPORATED IN THE DESIGN AND CONSTRUCTION OF STRUCTURES IN THESE DESIGNATED AREAS. REFERENCE SHALL BE MADE TO THE DEVELOPMENT COVENANTS AND RESTRICTIONS OF THIS DEVELOPMENT AND REQUIREMENTS OF THE TOWN BUILDING OFFICIAL. IN ADDITION, FEDERAL LAW REQUIRES MANDATIORY PURCHASE OF FLOOD INSURANCE AS A PREREQUISITE TO FEDERALLY INSURED MORTGAGE FINANCING IN THESE DESIGNATED FLOOD HAZARD AREAS.

REFERENCE

1. A PLAT OF BARONY BEACH CLUB HORIZONTAL PROPERTY REGIME. HILTON HEAD ISLAND, BEAUFORT COUNTY, SOUTH CAROLINA.
   DATE: 04–30–2000
   PLAT BOOK: 74 PAGE: 199–A
   BY: TERRY G. HATCHELL, S.C.R.L.S. No. 11059
2. AN ASBUILT SURVEY OF WESTIN RESORT, HILTON HEAD, A SECTION OF PORT ROYAL PLANTATION. BEAUFORT COUNTY, SOUTH CAROLINA.
   DATE: 05–04–85
   PLAT BOOK: 35 PAGE 284
   BY: JERRY L. RICHARDSON, S.C.R.L.S. No. 4734

ATLAS SURVEYING INC.
49 BROWN'S COVE ROAD, SUITE #5
RIDGELAND, SC 29936
PHONE: (843) 645–9277
FAX: (843) 645–9267
WEBSITE: WWW.ATLASSURVEYING.COM

SOUTH CAROLINA ATLAS SURVEYING,INC. No. C04285 CERTIFICATE OF AUTHORITY

SOUTH CAROLINA PROFESSIONAL LAND SURVEYOR No. 22744 WILLIAM H. GRAY, JR.

PREPARED FOR:
SCG HILTON HEAD PROPERYT LLC

A TREE AND TOPOGRAPHIC, ASBUILT AND BEACH ACT SURVEY OF

A SECTION OF PORT ROYAL PLANTATION,
WESTIN RESORT
HILTON HEAD ISLAND

TAX PARCEL No. R510 009 000 0892

HILTON HEAD ISLAND
BEAUFORT COUNTY, SOUTH CAROLINA

FIELD WORK:	RKB
FIELD CHECK:	WHG
DRAWN BY:	JMB
DATE:	12–09–13
SCALE:	1"=16'
PROJECT No.:	13293
FILE:	13293 T1.DWG

I HEREBY STATE THAT TO THE BEST OF MY KNOWLEDGE, INFORMATION, AND BELIEF, THE SURVEY SHOWN HEREIN WAS MADE IN ACCORDANCE WITH THE REQUIREMENTS OF THE MINIMUM STANDARDS MANUAL FOR THE PRACTICE OF LAND SURVEYING IN SOUTH CAROLINA, AND MEETS OR EXCEEDS THE REQUIREMENTS FOR A CLASS "A" SURVEY AS SPECIFIED THEREIN.

WILLIAM H. GRAY, JR.
S.C.P.L.S. No. 22744
NOT VALID UNLESS CRIMPED WITH SEAL

THIS DOCUMENT AND ALL REPRODUCIBLE COPIES OF THIS DOCUMENT ARE THE PROPERTY OF WARD EDWARDS, INC. REPRODUCTION OR ALTERATIONS OF THIS DRAWING WITHOUT THE WRITTEN CONSENT OF WARD EDWARDS, INC. IS NOT PERMITTED.

SITE DEVELOPMENT PLANS

FOR

WESTIN HOTEL PAVILION EXPANSION

TOWN OF HILTON HEAD ISLAND, SOUTH CAROLINA

GENERAL NOTES:

1. BOUNDARY INFORMATION TAKEN FROM A ASBUILT. TREE AND TOPOGRAPHIC AND BEACH ACT SURVEY OF A SECTION OF PORT ROYAL PLANTATION, WESTIN RESORT HILTON HEAD ISLAND, DATED 08-03-16, BY ATLAS SURVEYING.
2. TOPOGRAPHIC DATA PROVIDED BY ATLAS SURVEYING, DATED 08-03-16.
3. APPROXIMATE LOCATION OF CERTAIN EXISTING UNDERGROUND UTILITY LINES AND STRUCTURES ARE SHOWN ON THE PLANS FOR INFORMATION ONLY ADDITIONAL UNDERGROUND LINES OR STRUCTURES MAY EXIST THAT ARE NOT SHOWN. CALL PALMETTO UTILITY PROTECTION SERVICE AT 1-888-721-7877 BETWEEN THE HOURS OF 7:00 AM AND 7:00 PM MONDAY THRU FRIDAY AT LEAST THREE WORKING DAYS BEFORE COMMENCING CONSTRUCTION. REQUEST UNDERGROUND UTILITIES TO BE LOCATED AND MARKED WITHIN AND NEAR THE CONSTRUCTION SITE.
4. COMPLY WITH SOUTH CAROLINA UNDERGROUND UTILITY DAMAGE PREVENTION ACT (S.C. CODE ANN, 58-35-10, CT-SEQ, SUPP. 1978). NOTIFICATION OF INTENT TO EXCAVATE MAY BE GIVEN BY CALLING THE TOLL FREE NUMBER: 1-800-922-0983.
5. PROTECT BENCH MARKS AND PROPERTY MONUMENTS FROM DAMAGE DURING CONSTRUCTION OPERATIONS. REPLACE ANY BENCH MARKS OR MONUMENTS DAMAGED OR DESTROYED AS A RESULT OF CONTRACTOR'S OPERATIONS AT NO COST TO THE OWNER.
6. OFF-STREET PARKING FOR THE CONTRACTOR'S EMPLOYEES AND AUTHORIZED VISITORS TO THE SITE MUST BE PROVIDED AND MAINTAINED THROUGHOUT CONSTRUCTION.
7. THE CONTRACTOR IS RESPONSIBLE FOR ADHERING TO WEIGHT LIMITS PRESCRIBED FOR ALL PUBLIC ROADS WHEN HAULING EQUIPMENT AND MATERIALS TO AND FROM THE PROJECT SITE. DAMAGES TO EXISTING PAVEMENT DUE TO THE CONTRACTOR'S CONSTRUCTION OPERATIONS OR IMPROPER TRANSPORTATION OF MATERIALS AND EQUIPMENT SHALL BE THE RESPONSIBILITY OF THE CONTRACTOR.
8. AT LEAST ONE DRIVING LANE ON PUBLIC ROADS SHALL REMAIN OPEN TO TRAFFIC AT ALL TIMES. TRAFFIC LANES WILL ONLY BE CLOSED WITH THE EXPRESS WRITTEN CONSENT OF THE AGENCY HAVING JURISDICTION OVER THE ROADWAY. NOTIFY AGENCY HAVING JURISDICTION AT LEAST 5 DAYS BEFORE CLOSING ANY DRIVING LANES TO TRAFFIC. PROVIDE TRAFFIC CONTROL DEVICES, SIGNS AND FLAGMEN AS REQUIRED TO ENSURE PUBLIC SAFETY.
9. CONTRACTOR SHALL COORDINATE DEMOLITION, CLEARING AND CONSTRUCTION OF IMPROVEMENTS TO MINIMIZE INTERFERENCE WITH VEHICULAR AND PEDESTRIAN TRAFFIC AND WITH OPERATIONS OF EXISTING FACILITIES.

WATER AND SEWER LINE CONSTRUCTION:

1. ALL WATER AND SEWER LINE CONSTRUCTION SHALL CONFORM TO APPLICABLE STATE AND HILTON HEAD PUBLIC SERVICE DISTRICT (HHPSD) REQUIREMENTS, STANDARDS AND SPECIFICATIONS.
2. HHPSD WILL BE RESPONSIBLE FOR INSPECTION AND APPROVAL OF ALL WATER AND SEWER SYSTEM CONSTRUCTION AND FOR ACCEPTANCE FOR OPERATION AND MAINTENANCE.
3. ALL UTILITIES SHOWN ARE APPROXIMATE LOCATIONS. THE CONTRACTOR IS RESPONSIBLE FOR NOTIFICATION OF ALL UTILITY OWNERS AND FOR FIELD VERIFICATION OF BOTH HORIZONTAL AND VERTICAL LOCATIONS PRIOR TO COMMENCING CONSTRUCTION. ANY DAMAGES TO EXISTING UTILITIES DUE TO THIS CONSTRUCTION SHALL BE THE RESPONSIBILITY OF THE CONTRACTOR.
4. NOTIFY THE PROJECT ENGINEER, IF CONFLICTS WITH EXISTING STRUCTURES REQUIRE THAT PROPOSED UTILITIES BE RELOCATED.
5. THE CONTRACTOR MUST NOTIFY HHPSD FORTY-EIGHT (48) HOURS PRIOR TO ANY CONSTRUCTION, INSPECTION OR TESTING OF THE WATER DISTRIBUTION SYSTEM.
6. PIPE, FITTINGS, VALVES AND APPURTENANCES FOR WATER AND SEWER LINES SHALL ALL BE IN ACCORDANCE WITH THE REQUIREMENTS CONTAINED IN THE HHPSD TECHNICAL SPECIFICATIONS.
7. INSTALLATION OF WATER AND SEWER LINES AND APPURTENANCES SHALL BE IN ACCORDANCE WITH THE HHPSD STANDARD CONSTRUCTION DETAILS AND SPECIFICATIONS.
8. CONTRACTOR SHALL INSTALL MECHANICAL RESTRAINTS ON ALL BENDS, PLUGS AND TEES, 2" OR LARGER, ON WATERLINES AND SANITARY SEWER FORCE MAINS.
9. ALL WATER MAINS SHALL BE STERILIZED AND PRESSURE TESTED IN ACCORDANCE WITH HHPSD SPECIFICATIONS.
10. SEPARATION OF WATER MAINS AND SEWERS:
    a. PARALLEL INSTALLATION: UNLESS OTHERWISE SPECIFICALLY SHOWN IN A SPECIAL DETAIL ON THE PLANS, INSTALL WATER MAINS AT LEAST 10-FT. HORIZONTALLY FROM ANY EXISTING OR PROPOSED SANITARY SEWER OR SANITARY SEWER FORCE MAIN, THE DISTANCE BEING MEASURED IN A HORIZONTAL PLANE BETWEEN THE OUTSIDE SURFACES OF THE PIPES.
    b. CROSSINGS: UNLESS OTHERWISE SPECIFICALLY SHOWN IN A SPECIAL DETAIL ON THE PLANS, INSTALL WATER LINES CROSSING SANITARY SEWERS OR SANITARY SEWER FORCE MAINS TO PROVIDE A MINIMUM VERTICAL SEPARATION OF 18-INCHES BETWEEN THE OUTSIDE SURFACES OF THE PIPES. THIS SHALL BE THE CASE WHETHER THE WATER LINE IS ABOVE OR BELOW THE SANITARY SEWER LINE. WHENEVER POSSIBLE LOCATE THE WATER LINE ABOVE THE SEWER LINE. WHERE A NEW WATER LINE CROSSES A NEW SEWER LINE, PLACE A FULL LENGTH OF DUCTILE IRON PIPE FOR WATER LINE AT THE CROSSING WITH PIPE POSITIONED SO THAT THE JOINTS ARE AS FAR AS POSSIBLE FROM THE POINT OF CROSSING. WHERE A NEW WATER LINE CROSSES AN EXISTING SEWER LINE, PLACE ONE FULL LENGTH OF DUCTILE IRON PIPE WATER LINE SO THAT THE JOINTS ARE AS FAR FROM THE POINT OF CROSSING AS POSSIBLE.
11. THE CONTRACTOR SHALL CUT AND PATCH EXISTING PAVEMENT AS REQUIRED FOR THE INSTALLATION OF UTILITY LINES.
12. SANITARY MANHOLE RIM GRADES SHOWN ARE APPROXIMATE. ADJUST RIM ELEVATIONS TO BE FLUSH WITH FINISHED GRADE.
13. THE CONTRACTOR UNDER THIS CONTRACT SHALL NOT MAKE ANY CONNECTIONS TO THE EXISTING WATER OR SANITARY SEWER SYSTEMS UNLESS EXPRESSLY AUTHORIZED TO DO SO BY THE HHPSD. ALL WATER AND SEWER IMPROVEMENTS UNDER THIS CONTRACT MUST BE CONSTRUCTED COMPLETE, TESTED, INSPECTED AND APPROVED BY THE HHPSD BEFORE ANY AUTHORIZATION TO CONNECT WILL BE GIVEN. COORDINATION OF TESTING, INSPECTION AND CONNECTIONS WITH THE HHPSD IS THE RESPONSIBILITY OF THE CONTRACTOR UNDER THIS CONTRACT.
14. ALL WATER MAINS SHALL BE INSTALLED WITH THIRTY-SIX INCHES (36") MINIMUM COVER (FROM FINISHED GRADE). MAXIMUM DEPTH SHALL BE FIVE FEET (5'). WHERE WATER MAINS MAY CONFLICT WITH OTHER UTILITIES, THE WATER MAIN CROSSING SHALL BE CONSTRUCTED WITH DUCTILE IRON PIPE, MECHANICAL JOINT 45-DEG. BENDS AND MECHANICAL RESTRAINTS.

TREE PROTECTION-HILTON HEAD ISLAND

1. ONLY THOSE TREES APPROVED FOR REMOVAL IN ACCORDANCE WITH THE TOWN OF HILTON HEAD ISLAND LAND MANAGEMENT ORDINANCE AND SO DESIGNATED ON THE DRAWINGS FOR REMOVAL ARE TO BE REMOVED AS PART OF THE SITE CLEARING OPERATIONS. ALL TREES NOT DESIGNATED ON THE PLANS FOR REMOVAL MUST BE PRESERVED.
2. THE CONTRACTOR IS RESPONSIBLE FOR MARKING THE TREES DESIGNATED TO BE PRESERVED AND THOSE TO BE REMOVED IN ACCORDANCE WITH THE REQUIREMENTS CONTAINED IN CHAPTER 6, ARTICLE IV, SECTION 16-6-403 OF THE TOWN OF HILTON HEAD ISLAND LAND MANAGEMENT ORDINANCE.
3. PRIOR TO COMMENCING ANY CLEARING OR CONSTRUCTION OPERATIONS ON THE SITE, THE CONTRACTOR SHALL ERECT TREE PROTECTION BARRIERS AROUND EACH TREE OR GROUP OF TREES DESIGNATED FOR PRESERVATION IN ACCORDANCE WITH THE DETAILS ON THE PLANS AND THE REQUIREMENTS CONTAINED IN CHAPTER 6, ARTICLE IV, SECTION 16-6-404 OF THE TOWN OF HILTON HEAD ISLAND LAND MANAGEMENT ORDINANCE.
4. A TREE PROTECTION ZONE SHALL BE ESTABLISHED IN ACCORDANCE WITH THE PROVISIONS CONTAINED IN CHAPTER 6, ARTICLE IV, SECTION 16-6-404 OF THE TOWN OF HILTON HEAD ISLAND LAND MANAGEMENT ORDINANCE FOR EACH EXISTING TREE DESIGNATED FOR PRESERVATION. THE MINIMUM TREE PROTECTION ZONE SHALL BE A CIRCULAR AREA CENTERED ON THE TREE AND HAVING A RADIUS OF THE GREATER OF 5-FT. OR ONE-HALF FOOT PER INCH dbh (DIAMETER AT BREAST HEIGHT). THE SIZE OR CONFIGURATION OF THE TREE PROTECTION ZONE MAY BE ADJUSTED AT THE DISCRETION OF THE TOWN OF HILTON HEAD ISLAND PLANNING DEPARTMENT DIRECTOR.
5. THE AREA WITHIN THE TREE PROTECTION ZONE MUST REMAIN OPEN AND UNPAVED. NO CHANGE OF GRADE WILL BE ALLOWED WITHIN THE TREE PROTECTION ZONE EXCEPT FOR A 2-INCH CUT OR 2-INCH FILL OF TOPSOIL, SOD OR MULCH. ANY ACTIVITY WITHIN THE TREE PROTECTION ZONE IS SUBJECT TO APPROVAL BY THE TOWN OF HILTON HEAD ISLAND PLANNING DEPARTMENT DIRECTOR. THE FOLLOWING ACTIVITIES ARE PROHIBITED WITHIN THE TREE PROTECTION ZONE:
    A. PLACEMENT OR STORAGE OF ANY SOIL, DEBRIS, OILS, FUEL, PAINTS, BUILDING MATERIALS OR ANY OTHER MATERIALS.
    B. BURNING
    C. VEHICLE PARKING
    D. PAVING
    E. TRENCHING FOR UTILITIES
6. WHERE UTILITY LINES MUST PASS THRU THE TREE PROTECTION ZONE, THEY SHALL BE INSTALLED BY HORIZONTAL BORING BENEATH THE ROOTS OF THE TREE.
7. WHERE IT IS NECESSARY FOR MACHINERY AND EQUIPMENT TO PASS WITHIN THE TREE PROTECTION ZONE, APPROVAL MUST BE OBTAINED FROM THE TOWN OF HILTON HEAD ISLAND PLANNING DEPARTMENT DIRECTOR. SPECIAL MEASURES WILL BE REQUIRED TO PROTECT THE ROOTS FROM EXCESSIVE COMPACTION.
8. THE CONTRACTOR IS RESPONSIBLE FOR COORDINATING A STAKING INSPECTION WITH THE TOWN OF HILTON HEAD ISLAND PRIOR TO CLEARING. THE FOLLOWING MUST BE COMPLETED BEFORE THE INSPECTION:
    A. ALL BUILDING EDGES, SIDEWALKS, PAVED AREAS AND UTILITY LINES STAKED.
    B. TREE PROTECTION BARRIERS INSTALLED.
    C. TREES TO BE PRESERVED MARKED WITH BLUE FLAGGING AND THOSE TO BE REMOVED MARKED WITH RED FLAGGING.
    D. ALL SILT FENCE INSTALLED PER THE APPROVED PLAN.

SITE GRADING AND DRAINAGE:

1. ALL UTILITIES SHOWN ARE APPROXIMATE LOCATIONS. THE CONTRACTOR SHALL BE RESPONSIBLE FOR PROVIDING 72-HOUR NOTICE TO ALL RESPECTIVE UTILITY COMPANIES FOR FIELD VERIFICATION OF EXISTING UTILITIES PRIOR TO CONSTRUCTION. ANY DAMAGES TO EXISTING UTILITIES DUE TO THIS CONSTRUCTION SHALL BE THE RESPONSIBILITY OF THE CONTRACTOR.
2. TEMPORARY CONTROL OF STORM WATER DRAINAGE SHALL BE THE RESPONSIBILITY OF THE CONTRACTOR. SEQUENCING AND CONSTRUCTION TECHNIQUES SHALL PREVENT OBSTRUCTION OF STORM SEWERS, PONDING IN TRAFFIC AREAS OR RISING OF WATER LEVELS WHICH WOULD ENTER ADJACENT BUILDINGS OR STRUCTURES.
3. FULL WIDTH OF STREET AND ROAD RIGHTS-OF-WAY MUST BE CLEARED AND GRADED AS SHOWN IN THE DETAILS ON THE DRAWINGS
4. SUBGRADE PREPARATION: TOP SOIL SHALL BE REMOVED FROM PAVED AREAS TO A MINIMUM DEPTH OF 4". ALL EXCAVATION SHALL BE TO SUBGRADE LIMITS.
5. ALL UTILITY PIPE LINES, CONDUITS AND SLEEVES UNDER PAVED AREAS MUST BE IN PLACE PRIOR TO COMPLETION OF THE ROADWAY SUBGRADE COMPACTION.
6. FINISH GRADING SHALL INCLUDE THE PLACEMENT OF TOPSOIL OVER ALL UNPAVED AREAS NOT OCCUPIED BY BUILDINGS OR STRUCTURES AND FINE GRADING AROUND BUILDINGS, ADJACENT TO WALKS, CURBS, GUTTERS AND STRUCTURES TO ASSURE POSITIVE DRAINAGE.

SCDHEC/OCRM SEDIMENT AND EROSION CONTROL STANDARD NOTES (REVISED DEC-2012):

1. IF NECESSARY, SLOPES, WHICH EXCEED EIGHT (8) VERTICAL FEET SHOULD BE STABILIZED WITH SYNTHETIC OR VEGETATIVE MATS, IN ADDITION TO HYDROSEEDING. IT MAY BE NECESSARY TO INSTALL TEMPORARY SLOPE DRAINS DURING CONSTRUCTION. TEMPORARY BERMS MAY BE NEEDED UNTIL THE SLOPE IS BROUGHT TO GRADE.
2. STABILIZATION MEASURES SHALL BE INITIATED AS SOON AS PRACTICABLE IN PORTIONS OF THE SITE WHERE CONSTRUCTION ACTIVITIES HAVE TEMPORARILY OR PERMANENTLY CEASED, BUT IN NO CASE MORE THAN FOURTEEN (14) DAYS AFTER WORK HAS CEASED, EXCEPT AS STATED BELOW.
    - WHERE STABILIZATION BY THE 14TH DAY IS PRECLUDED BY SNOW COVER OR FROZEN GROUND CONDITIONS STABILIZATION MEASURES MUST BE INITIATED AS SOON AS PRACTICABLE.
    - WHERE CONSTRUCTION ACTIVITY ON A PORTION OF THE SITE IS TEMPORARILY CEASED, AND EARTH-DISTURBING ACTIVITIES WILL BE RESUMED WITHIN 14 DAYS, TEMPORARY STABILIZATION MEASURES DO NOT HAVE TO BE INITIATED ON THAT PORTION OF THE SITE.
3. ALL SEDIMENT AND EROSION CONTROL DEVICES SHALL BE INSPECTED ONCE EVERY CALENDAR WEEK. IF PERIODIC INSPECTION OR OTHER INFORMATION INDICATES THAT A BMP HAS BEEN INAPPROPRIATELY, OR INCORRECTLY INSTALLED, THE PERMITTEE MUST ADDRESS THE NECESSARY REPLACEMENT OR MODIFICATION REQUIRED TO CORRECT THE BMP WITHIN 48 HOURS OF IDENTIFICATION.
4. PROVIDE SILT FENCE AND/OR OTHER CONTROL DEVICES, AS MAY BE REQUIRED, TO CONTROL SOIL EROSION DURING UTILITY CONSTRUCTION. ALL DISTURBED AREAS SHALL BE CLEANED, GRADED, AND STABILIZED WITH GRASSING IMMEDIATELY AFTER THE UTILITY INSTALLATION. FILL, COVER, AND TEMPORARY SEEDING AT THE END OF EACH DAY ARE RECOMMENDED. IF WATER IS ENCOUNTERED WHILE TRENCHING, THE WATER SHOULD BE FILTERED TO REMOVE SEDIMENT BEFORE BEING PUMPED BACK INTO ANY WATERS OF THE STATE.
5. ALL EROSION CONTROL DEVICES SHALL BE PROPERLY MAINTAINED DURING ALL PHASES OF CONSTRUCTION UNTIL THE COMPLETION OF ALL CONSTRUCTION ACTIVITIES AND ALL DISTURBED AREAS HAVE BEEN STABILIZED. ADDITIONAL CONTROL DEVICES MAY BE REQUIRED DURING CONSTRUCTION IN ORDER TO CONTROL EROSION AND/OR OFFSITE SEDIMENTATION. ALL TEMPORARY CONTROL DEVICES SHALL BE REMOVED ONCE CONSTRUCTION IS COMPLETE AND THE SITE IS STABILIZED.
6. THE CONTRACTOR MUST TAKE NECESSARY ACTION TO MINIMIZE THE TRACKING OF MUD ONTO PAVED ROADWAY(S) FROM CONSTRUCTION AREAS AND THE GENERATION OF DUST. THE CONTRACTOR SHALL DAILY REMOVE MUD/SOIL FROM PAVEMENT, AS MAY BE REQUIRED.
7. RESIDENTIAL SUBDIVISIONS REQUIRE EROSION CONTROL FEATURES FOR INFRASTRUCTURE AS WELL AS FOR INDIVIDUAL LOT CONSTRUCTION. INDIVIDUAL PROPERTY OWNERS SHALL FOLLOW THESE PLANS DURING CONSTRUCTION OR OBTAIN APPROVAL OF AN INDIVIDUAL PLAN IN ACCORDANCE WITH S.C REG. 72-300 ET SEQ. AND SCR100000.
8. TEMPORARY DIVERSION BERMS AND/OR DITCHES WILL BE PROVIDED AS NEEDED DURING CONSTRUCTION TO PROTECT WORK AREAS FROM UPSLOPE RUNOFF AND/OR TO DIVERT SEDIMENT-LADEN WATER TO APPROPRIATE TRAPS OR STABLE OUTLETS.
9. ALL WATERS OF THE STATE (WOS), INCLUDING WETLANDS, ARE TO BE FLAGGED OR OTHERWISE CLEARLY MARKED IN THE FIELD. A DOUBLE ROW OF SILT FENCE IS TO BE INSTALLED IN ALL AREAS WHERE A 50-FOOT BUFFER CAN□T BE MAINTAINED BETWEEN THE DISTURBED AREA AND ALL WOS. A 10-FOOT BUFFER SHOULD BE MAINTAINED BETWEEN THE LAST ROW OF SILT FENCE AND ALL WOS.
10. LITTER, CONSTRUCTION DEBRIS, OILS, FUELS, AND BUILDING PRODUCTS WITH SIGNIFICANT POTENTIAL FOR IMPACT (SUCH AS STOCKPILES OF FRESHLY TREATED LUMBER) AND CONSTRUCTION CHEMICALS THAT COULD BE EXPOSED TO STORM WATER MUST BE PREVENTED FROM BECOMING A POLLUTANT SOURCE IN STORM WATER DISCHARGES.
11. A COPY OF THE SWPPP, INSPECTIONS RECORDS, AND RAINFALL DATA MUST BE RETAINED AT THE CONSTRUCTION SITE OR A NEARBY LOCATION EASILY ACCESSIBLE DURING NORMAL BUSINESS HOURS, FROM THE DATE OF COMMENCEMENT OF CONSTRUCTION ACTIVITIES TO THE DATE THAT FINAL STABILIZATION IS REACHED.
12. INITIATE STABILIZATION MEASURES ON ANY EXPOSED STEEP SLOPE (3H:1V OR GREATER) WHERE LAND-DISTURBING ACTIVITIES HAVE PERMANENTLY OR TEMPORARILY CEASED, AND WILL NOT RESUME FOR A PERIOD OF 7 CALENDAR DAYS.
13. MINIMIZE SOIL COMPACTION AND, UNLESS INFEASIBLE, PRESERVE TOPSOIL.
14. MINIMIZE THE DISCHARGE OF POLLUTANTS FROM EQUIPMENT AND VEHICLE WASHING, WHEEL WASH WATER, AND OTHER WASH WATERS. WASH WATERS MUST BE TREATED IN A SEDIMENT BASIN OR ALTERNATIVE CONTROL THAT PROVIDES EQUIVALENT OR BETTER TREATMENT PRIOR TO DISCHARGE;
15. MINIMIZE THE DISCHARGE OF POLLUTANTS FROM DEWATERING OF TRENCHES AND EXCAVATED AREAS. THESE DISCHARGES ARE TO BE ROUTED THROUGH APPROPRIATE BMPS (SEDIMENT BASIN, FILTER BAG, ETC.).
16. THE FOLLOWING DISCHARGES FROM SITES ARE PROHIBITED:
    - WASTEWATER FROM WASHOUT OF CONCRETE, UNLESS MANAGED BY AN APPROPRIATE CONTROL;
    - WASTEWATER FROM WASHOUT AND CLEANOUT OF STUCCO, PAINT, FORM RELEASE OILS, CURING COMPOUNDS AND OTHER CONSTRUCTION MATERIALS;
    - FUELS, OILS, OR OTHER POLLUTANTS USED IN VEHICLE AND EQUIPMENT OPERATION AND MAINTENANCE; AND
    - SOAPS OR SOLVENTS USED IN VEHICLE AND EQUIPMENT WASHING.
17. AFTER CONSTRUCTION ACTIVITIES BEGIN, INSPECTIONS MUST BE CONDUCTED AT A MINIMUM OF AT LEAST ONCE EVERY CALENDAR WEEK AND MUST BE CONDUCTED UNTIL FINAL STABILIZATION IS REACHED ON ALL AREAS OF THE CONSTRUCTION SITE.
18. IF EXISTING BMPS NEED TO BE MODIFIED OR IF ADDITIONAL BMPS ARE NECESSARY TO COMPLY WITH THE REQUIREMENTS OF THIS PERMIT AND/OR SC□S WATER QUALITY STANDARDS, IMPLEMENTATION MUST BE COMPLETED BEFORE THE NEXT STORM EVENT WHENEVER PRACTICABLE. IF IMPLEMENTATION BEFORE THE NEXT STORM EVENT IS IMPRACTICABLE, THE SITUATION MUST BE DOCUMENTED IN THE SWPPP AND ALTERNATIVE BMPS MUST BE IMPLEMENTED AS SOON AS REASONABLY POSSIBLE.
19. A PRE-CONSTRUCTION CONFERENCE MUST BE HELD FOR EACH CONSTRUCTION SITE WITH AN APPROVED ON-SITE SWPPP PRIOR TO THE IMPLEMENTATION OF CONSTRUCTION ACTIVITIES. FOR NON-LINEAR PROJECTS THAT DISTURB 10 ACRES OR MORE THIS CONFERENCE MUST BE HELD ON-SITE UNLESS THE DEPARTMENT HAS APPROVED OTHERWISE.

DRY UTILITY CONDUITS FOR ELECTRIC, TELEPHONE AND CABLE TV:

1. ALL DRY UTILITY CONDUIT ENDS SHALL BE CAPPED AND MARKED WITH A STEEL REBAR STAKE IMBEDDED ONE (1) FOOT BELOW GROUND SURFACE.
2. 48" MINIMUM DEPTH FOR ALL ELECTRICAL CONDUITS.
3. MAINTAIN MINIMUM 12" VERTICAL CLEARANCE WHEN CROSSING WATER, SEWER, AND STORM DRAIN LINES.
4. AINTAIN MINIMUM 18" HORIZONTAL CLEARANCE WHEN PARALLELING WATER, SEWER AND STORM DRAIN LINES.
5. EXTEND CONDUIT BEYOND PAVEMENT, CURB, AND SIDEWALKS.
6. THE CONTRACTOR SHALL BE RESPONSIBLE FOR COORDINATION OF THE INSTALLATION OF ALL UTILITY SERVICE CONNECTIONS. REFER TO APPROVED BUILDING PLANS FOR THE EXACT LOCATION OF ALL SERVICE CONNECTIONS. THE CONTRACTOR MUST INSTALL ALL CONDUITS, AS SHOWN ON THE PLANS OR AS REQUIRED BY RESPECTIVE UTILITY COMPANIES. THE CONTRACTOR SHALL BE RESPONSIBLE TO ENSURE STRICT COMPLIANCE WITH ALL APPLICABLE CODES AND REGULATIONS WITH REGARDS TO THE INSTALLATION OF UTILITIES AND CONDUIT.
7. LOCATIONS SHOWN ON THE PLANS FOR PROPOSED DRY UTILITY CONDUITS ARE APPROXIMATE ONLY. ALL DIMENSIONING AND STAKING SHOULD BE BASED ON ECONOMICAL AND PRACTICAL CONSTRUCTION. THE CONTRACTOR SHALL BE RESPONSIBLE FOR COORDINATION WITH THE RESPECTIVE UTILITY REPRESENTATIVES, PRIOR TO ANY CONDUIT INSTALLATION.
8. RANSFORMER PADS SHALL BE LOCATED AS DIRECTED BY THE RESPECTIVE UTILITY REPRESENTATIVE. THE CONTRACTOR SHALL BE RESPONSIBLE FOR COMPLIANCE WITH APPLICABLE CODE REQUIREMENTS.
9. NOTIFY THE ENGINEER IF CONFLICTS WITH EXISTING OR PROPOSED STRUCTURES REQUIRE THAT PROPOSED UTILITIES BE RELOCATED.

SITE CLEARING AND DEMOLITION:

1. NO CLEARING SHALL OCCUR WITHIN DESIGNATED BUFFER ZONES, TREE PROTECTION ZONES, OUTSIDE OF THE PROPERTY LINES OR BEYOND THE CLEARING LIMITS UNLESS OTHERWISE SPECIFICALLY SHOWN ON THE PLANS.
2. ONLY THOSE TREES DESIGNATED ON THE DRAWINGS FOR REMOVAL ARE TO BE REMOVED AS PART OF THE SITE CLEARING OPERATIONS.
3. HE CONTRACTOR SHALL INSTALL A CONTINUOUS LINE OF FLAGGING OR FENCING ALONG THE LIMITS OF CLEARING PRIOR TO COMMENCING ANY CLEARING, DEMOLITION OR CONSTRUCTION WORK ON THE PROJECT.
4. EXERCISE CAUTION DURING CLEARING OPERATIONS TO AVOID FELLING TREES INTO DESIGNATED TREE PROTECTION ZONES.
5. NO BURNING WILL BE ALLOWED WITHIN 50 FEET OF A TREE PROTECTION ZONE OR TREE DRIP LINE.
6. SELECTIVE CLEARING AREAS SHALL BE CLEARED OF ALL BRUSH AND UNDERSTORY GROWTH.

UTILITY CONTACTS:

Palmetto Electric	843-208-5512	1 Cooperative Way, Hardeeville, SC 29927
SCE&G	843-815-8808	81 May River Road, Bluffton, SC 29910
Hilton Head Island PSD	843-681-5525	PO Box 21264, Hilton Head, SC 29925
Hargray Communications	843-815-1675	PO Box 3380, Bluffton, SC 29910
Time Warner Cable	843-913-7940	11 Office Park Road, Hilton Head, SC 29928
Century Link	843-525-0044	2127 Boundary St #16, Beaufort, SC 29902
Santee Cooper	843-761-8000	1 Riverwood Drive, Moncks Corner, SC 29461

MUNICIPALITY INFORMATION

Town of Hilton Head	843-341-4600	One Town Center Ct., Hilton Head Island, SC 29928

PROJECT DATA

DEVELOPER:
WESTIN HILTON HEAD ISLAND RESORT & SPA
TWO GRASSLAWN AVE.
HILTON HEAD ISLAND, SC 29928

24 HOUR CONTACT:
TIM FREISEN
843-681-1073
TIM.FREISEN@WESTIN.COM

PROJECT LOCATION:
JURISDICTION:
TOWN OF HILTON HEAD ISLAND
TAX MAP:
R510 009 000 0892
STREET ADDRESS:
2 GRASSLAWN AVE
PROPERTY OWNER OF RECORD:
SCG HILTON HEAD PROPERTY LLC N/K/A S
FEMA FLOOD ZONE / PANEL:
ZONE V9 & A7 / COMMUNITY NO. 450250, PANEL 0015-DU, DATED: 09/29/1986

NPDES DISTURBED AREA:
0.43 ACRES

APPROXIMATE LOCATION OF SITE:
INTERSECTION OF GRASSLAWN AVE & SOUTH PORT ROYAL DR

LATITUDE / LONGITUDE:
N 32° 12' 28"
W 80° 40' 51"

PROJECT AREA SUMMARY

ZONING DISTRICT: PD-1 PLANED DEVELOPMENT

IMPERVIOUS COVERAGE:	
EXISTING BUILDING / PAVILION	3,550 SQ. FT.
EXISTING CONCRETE SIDEWALKS / PATIOS	7,070 SQ. FT.
TOTAL EXISTING IMPERVIOUS COVERAGE	10,620 SQ. FT.
PROPOSED BUILDING / PAVILION	5,695 SQ. FT.
PROPOSED CONCRETE SIDEWALKS / PATIOS	4,875 SQ. FT.
TOTAL PROPOSED IMPERVIOUS COVERAGE	10,570 SQ. FT.

Know what's below. Call before you dig.

VICINITY MAP (NOT TO SCALE)

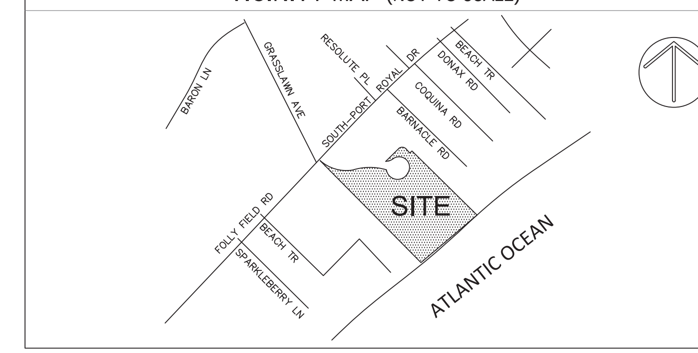

SCHEDULE OF DRAWINGS

SHEET NO.	DESCRIPTION
C001	COVER SHEET & CONSTRUCTION NOTES
C101	EXISTING CONDITIONS PLANS
C201	CLEARING & DEMOLITION PLANS
C301	EROSION CONTROL PLANS AND DETAILS
C401	SITE LAYOUT, PAVING & GRADING PLANS AND DETAILS
C501	DRAINAGE & UTILITY PLANS AND DETAILS
C601	CONSTRUCTION DETAILS

RELEASE SCHEDULE

RELEASE NO.	DESCRIPTION	DATE
A.	RELEASED FOR PERMITTING	09-06-16

SEQUENCE OF CONSTRUCTION ACTIVITIES PROJECT PHASING

ESTIMATED START DATE: 11-01-16 ESTIMATED COMPLETION DATE: 08-31-17

ITEMS MUST OCCUR IN THE ORDER LISTED; ITEMS CANNOT OCCUR CONCURRENTLY UNLESS SPECIFICALLY NOTED.

1. RECEIVE NPDES COVERAGE FROM DHEC.
2. PRE-CONSTRUCTION MEETING
3. NOTIFY DHEC EQC REGIONAL OFFICE OR OCRM OFFICE 48 HOURS PRIOR TO BEGINNING LAND-DISTURBING ACTIVITIES.
4. INSTALLATION OF CONSTRUCTION ENTRANCE.
5. CLEARING & GRUBBING ONLY AS NECESSARY FOR INSTALLATION OF PERIMETER CONTROLS.
6. INSTALLATION OF PERIMETER CONTROLS (E.G. SILT FENCE).
7. CLEARING & GRUBBING OF SITE OR DEMOLITION (SEDIMENT & EROSION CONTROL MEASURES FOR THESE AREAS MUST ALREADY BE INSTALLED).
8. ROUGH GRADING.
9. INSTALLATION OF STORM DRAIN SYSTEM AND PLACEMENT OF INLET PROTECTION AS EACH INLET IS INSTALLED.
10. FINE GRADING, PAVING, ETC.
11. PERMANENT / FINAL STABILIZATION.
12. REMOVAL OF TEMPORARY SEDIMENT & EROSION CONTROL MEASURES AFTER ENTIRE AREA DRAINING TO THE STRUCTURE IS FINALLY STABILIZED (THE DEPARTMENT RECOMMENDS THAT THE PROJECT OWNER / OPERATOR HAVE THE SWPPP PREPARER OR REGISTRATION EQUIVALENT APPROVE THE REMOVAL OF TEMPORARY STRUCTURES).
13. SUBMIT NOTICE OF TERMINATION (NOT) TO DHEC AS APPROPRIATE.

- NOTE: PERFORM WEEKLY SITE INSPECTIONS DURING LAND DISTURBING ACTIVITIES AND MAKE RECOMMENDATIONS FOR ADDITIONAL BMPs OR MAINTENANCE OF EXISTING BMPs
- NOTE: ALL PUMPED DEWATERING SHALL BE PERFORMED USING AN APPROPRIATELY SIZED PUMPED WATER FILTER BAG.

SCDHEC-OCRM CERTIFICATION:

"I HAVE PLACED MY SIGNATURE AND SEAL ON THE DESIGN DOCUMENTS SUBMITTED SIGNIFYING THAT I ACCEPT RESPONSIBILITY FOR THE DESIGN OF THE SYSTEM. FURTHER, I CERTIFY TO THE BEST OF MY KNOWLEDGE AND BELIEF THAT THE DESIGN IS CONSISTENT WITH THE REQUIREMENTS OF TITLE 48, CHAPTER 14 OF THE CODE OF LAWS OF SC, 1976 AS AMENDED, PURSUANT TO REGULATION 72-300 ET SEQ. (IF APPLICABLE), AND IN ACCORDANCE WITH THE TERMS AND CONDITIONS OF SCR100000."

SOUTH CAROLINA PROFESSIONAL ENGINEER No. 31640 ERIC L. HOOVER LICENSED 9/06/16

SOUTH CAROLINA CERTIFICATE OF AUTHORIZATION WARD EDWARDS, INC. No. C00152

PLAN REVISIONS		
NO.	DESCRIPTION	DATE
1		
2		
3		
4		
5		
6		
7		

Ward Edwards ENGINEERING
P.O. BOX 381, BLUFFTON, SOUTH CAROLINA 29910
PH (843) 837-5250 / FAX (843) 837-2558
WWW.WARDEDWARDS.COM

WESTIN HOTEL PAVILION EXPANSION
TOWN OF HILTON HEAD ISLAND, SOUTH CAROLINA
WESTIN HILTON HEAD ISLAND RESORT AND SPA
TOWN OF HILTON HEAD ISLAND, SOUTH CAROLINA
COVER SHEET & CONSTRUCTION NOTES

☑ NOT FOR CONSTRUCTION
☐ RELEASED FOR CONSTRUCTION

PROJECT #:	I50243
DATE:	09/06/16
DESIGNED BY:	ELH
CHECKED BY:	GAB
SCALE:	NO SCALE

SHEET
C001

IF THIS SHEET IS LESS THAN 22" X 34" IT IS A REDUCED PRINT, SCALE ACCORDINGLY

THIS DOCUMENT AND ALL REPRODUCIBLE COPIES OF THIS DOCUMENT ARE THE PROPERTY OF WARD EDWARDS, INC. REPRODUCTION OR ALTERATIONS OF THIS DRAWING WITHOUT THE WRITTEN CONSENT OF WARD EDWARDS, INC. IS NOT PERMITTED.

BEACHFRONT MANAGEMENT ACT DISCLOSURE STATEMENT

THE SETBACK LINE IS 158.5 LANDWARD FEET TO 180.3 LANDWARD FEET, FROM THE SEAWARD PROPERTY LINE. THE BASE LINE IS 138.5 LANDWARD FEET TO 160.2 LANDWARD FEET FROM THE SEAWARD PROPERTY LINE. THE VELOCITY ZONE, AS ESTABLISHED BY THE FEDERAL EMERGENCY MANAGEMENT ACT, IS LOCATED APPROXIMATELY 11.7 LANDWARD FEET TO 54.6 LANDWARD FEET IN RELATION TO THE PROPERTY. THE SEAWARD CORNERS OF THE HABITABLE STRUCTURES UPON THIS PROPERTY, IF ANY ARE LOCATED 205.94 LANDWARD TO 228.49 LANDWARD FEET FROM THE LINE, WHICH CORNERS ARE LOCATED N 136226.9890, E 2098828.6587 AND N 136296.7801, E 2098910.4787 UNDER THE SOUTH CAROLINA PLANE COORDINATE SYSTEM. THE PROPERTY HAS AN ANNUAL EROSION RATE OF −0.59 TO 0.69 FEET PER YEAR, ACCORDING TO THE MOST RECENTLY ADOPTED EROSION RATES OF THE SOUTH CAROLINA OFFICE OF OCEAN AND COASTAL RESOURCE MANAGEMENT. OCRM REFERENCE POINT 1477, ANNUAL EROSION RATE OF −0.59 AND POINT 1478 ANNUAL EROSION RATE 0.69 WERE USED TO ESTABLISH THE OCRM LINES.

NOTES

1. THIS PARCEL APPEARS TO LIE IN FLOOD ZONES V9 & A7 (EL. VARIES), FIRM PANEL 0015–D COMMUNITY 450250.
2. CONTOURS ARE IN ONE FOOT INTERVALS. TREES SIZES SHOWN ARE IN INCHES OF DIAMETER.
3. ELEVATIONS ARE BASED ON NGVD 29 DATUM.
4. OCRM BASELINE AND SETBACK LINES TAKEN FROM SURVEYORS PACKAGE, DHEC–OCRM, HILTON HEAD ISLAND, 2012 NGS–1983.
5. SOUTH CAROLINA COASTAL COUNCIL MONUMENTS USED:
   STATION NO. 1477
   STATION NO. 1478
6. THE LONG–TERM SHORELINE CHANGES RATES (LOCAL EROSION RATE) FOR MONUMENT 1477 (−0.59) & 1478 (0.69) FEET PER YEAR.
7. ALL COORDINATES ARE ON SOUTH CAROLINA STATE PLANE GRID NAD 83.

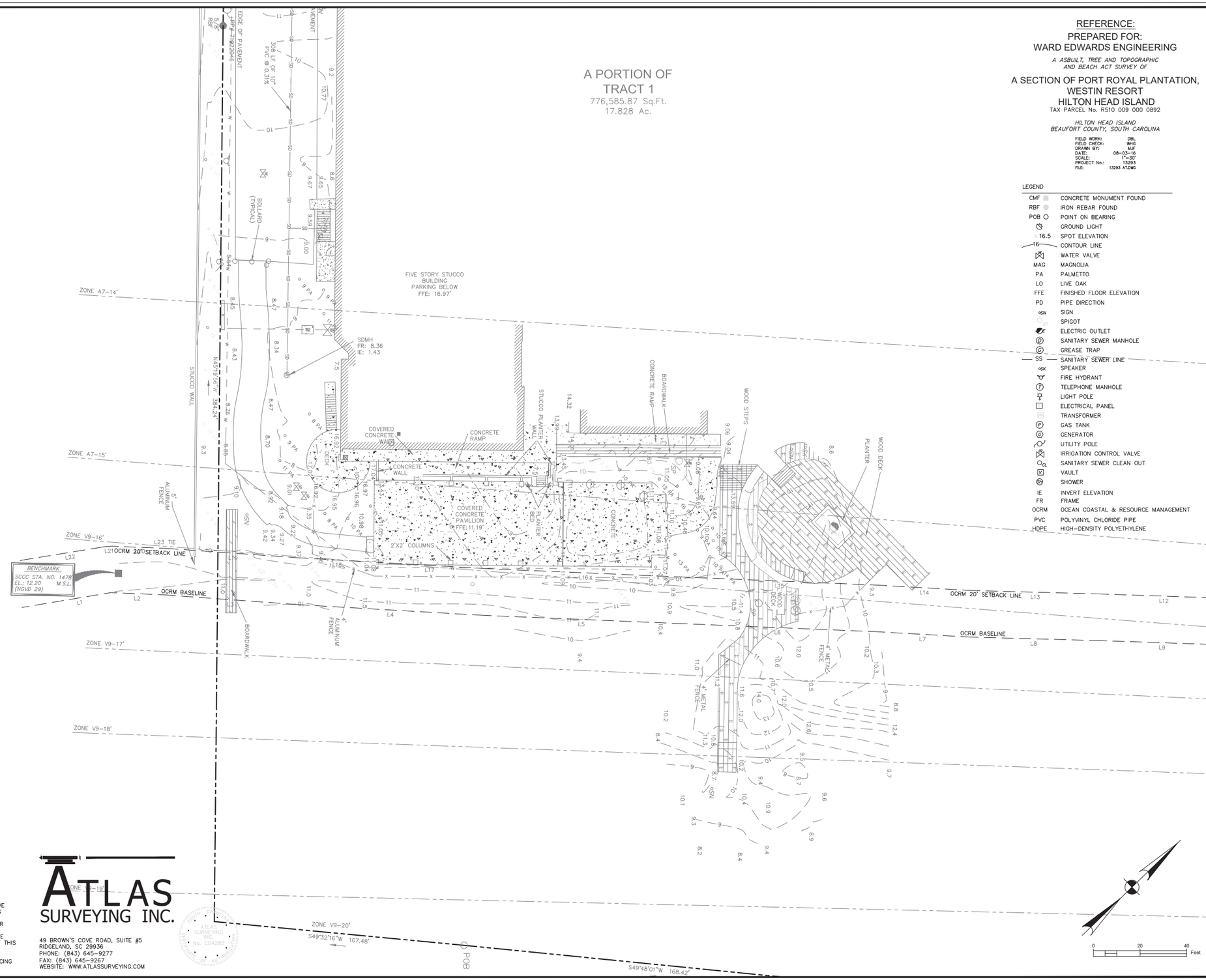

REFERENCE

1. SURVEY OF A PLAT OF BARONY BEACH CLUB HORIZONTAL PROPERTY REGIME. HILTON HEAD ISLAND, BEAUFORT COUNTY, SOUTH CAROLINA.
   DATE: 04–30–2000
   PLAT BOOK: 74 PAGE: 199–A
   BY: TERRY G. HATCHELL, S.C.R.L.S. No. 11059
2. AN ASBUILT SURVEY OF WESTIN RESORT, HILTON HEAD, A SECTION OF PORT ROYAL PLANTATION. BEAUFORT COUNTY, SOUTH CAROLINA.
   DATE: 05–04–85
   PLAT BOOK: 35 PAGE 284
   BY: JERRY L. RICHARDSON, S.C.R.L.S. No. 4734

SOME OR ALL AREAS ON THIS PLAT ARE FLOOD HAZARD AREAS AND HAVE BEEN IDENTIFIED AS HAVING AT LEAST A ONE PERCENT CHANCE OF BEING FLOODED IN ANY GIVEN YEAR BY RISING TIDAL WATERS ASSOCIATED WITH POSSIBLE HURRICANES. LOCAL REGULATIONS REQUIRE THAT CERTAIN FLOOR HAZARD PROTECTIVE MEASURES BE INCORPORATED IN THE DESIGN AND CONSTRUCTION OF STRUCTURES IN THESE DESIGNATED AREAS. REFERENCE SHALL BE MADE TO THE DEVELOPMENT COVENANTS AND RESTRICTIONS OF THIS DEVELOPMENT AND REQUIREMENTS OF THE TOWN BUILDING OFFICIAL. IN ADDITION, FEDERAL LAW REQUIRES MANDATORY PURCHASE OF FLOOD INSURANCE AS A PREREQUISITE TO FEDERALLY INSURED MORTGAGE FINANCING IN THESE DESIGNATED FLOOD HAZARD AREAS.

ATLAS SURVEYING INC.
49 BROWN'S COVE ROAD, SUITE #5
RIDGELAND, SC 29936
PHONE: (843) 645–9277
FAX: (843) 645–9267
WEBSITE: WWW.ATLASSURVEYING.COM

ATLAS SURVEYING INC. No. C04285 SOUTH CAROLINA PROFESSIONAL ENGINEER SEAL

REFERENCE:

PREPARED FOR:
WARD EDWARDS ENGINEERING

A ASBUILT, TREE AND TOPOGRAPHIC AND BEACH ACT SURVEY OF

A SECTION OF PORT ROYAL PLANTATION,
WESTIN RESORT
HILTON HEAD ISLAND
TAX PARCEL No. R510 009 000 0892

HILTON HEAD ISLAND
BEAUFORT COUNTY, SOUTH CAROLINA

FIELD WORK:	DBL
FIELD CHECK:	MHG
DRAWN BY:	MJF
DATE:	08–03–16
SCALE:	1"=30'
PROJECT No.:	13293
FILE:	13293 ATZMG

WARD EDWARDS, INC. No. C00152 SOUTH CAROLINA CERTIFICATE OF AUTHORIZATION

LEGEND

CMF	CONCRETE MONUMENT FOUND
RBF	IRON REBAR FOUND
POB	POINT ON BEARING
	GROUND LIGHT
16.5	SPOT ELEVATION
16	CONTOUR LINE
	WATER VALVE
MAG	MAGNOLIA
PA	PALMETTO
LO	LIVE OAK
FFE	FINISHED FLOOR ELEVATION
PD	PIPE DIRECTION
SIGN	SIGN
SP	SPIGOT
E	ELECTRIC OUTLET
	SANITARY SEWER MANHOLE
	GREASE TRAP
SS	SANITARY SEWER LINE
SPK	SPEAKER
	FIRE HYDRANT
T	TELEPHONE MANHOLE
	LIGHT POLE
	ELECTRICAL PANEL
	TRANSFORMER
P	GAS TANK
G	GENERATOR
	UTILITY POLE
	IRRIGATION CONTROL VALVE
CO	SANITARY SEWER CLEAN OUT
V	VAULT
	SHOWER
IE	INVERT ELEVATION
FR	FRAME
OCRM	OCEAN COASTAL & RESOURCE MANAGEMENT
PVC	POLYVINYL CHLORIDE PIPE
HDPE	HIGH–DENSITY POLYETHYLENE

NO.	DESCRIPTION	DATE
7		
6		
5		
4		
3		
2		
1		

PLAN REVISIONS

Ward Edwards ENGINEERING
P.O. BOX 381, BLUFFTON, SOUTH CAROLINA 29910
PH (843) 837-5250 / FAX (843) 837-2558
WWW.WARDEDWARDS.COM

WESTIN HOTEL PAVILION EXPANSION
TOWN OF HILTON HEAD ISLAND, SOUTH CAROLINA

WESTIN HILTON HEAD ISLAND RESORT AND SPA
TOWN OF HILTON HEAD ISLAND, SOUTH CAROLINA

EXISTING CONDITIONS PLAN

☑ NOT FOR CONSTRUCTION
☐ RELEASED FOR CONSTRUCTION

PROJECT #:	150243
DATE:	09/06/16
DESIGNED BY:	ELH
CHECKED BY:	GAB
SCALE:	1"=20'

SHEET
C101

Projects\15023 Westin Expansion HHI\CAD Files\150243-Master.dwg, 9/13/2016 12:24:48 PM, 1:1

IF THIS SHEET IS LESS THAN 22" X 34" IT IS A REDUCED PRINT. SCALE ACCORDINGLY

THIS DOCUMENT AND ALL REPRODUCIBLE COPIES OF THIS DOCUMENT ARE THE PROPERTY OF WARD EDWARDS, INC. REPRODUCTION OR ALTERATIONS OF THIS DRAWING WITHOUT THE WRITTEN CONSENT OF WARD EDWARDS, INC., IS NOT PERMITTED.

GENERAL NOTES:

1. ALL UTILITIES, ABOVE GROUND AND BELOW GROUND (PIPING, LINES, STRUCTURES, BOXES, ETC...) SHALL BE REMOVED WITHIN THE PROJECT AREA UNLESS OTHERWISE SPECIFIED. CONTRACTOR TO NOTE POINT OF CONNECTION BETWEEN EXISTING AND PROPOSED UTILITIES AND TO COORDINATE WITH RESPECTIVE UTILITY AGENCIES PRIOR TO ANY UTILITY INFRASTRUCTURE REMOVAL.
2. ALL STORM DRAIN INFRASTRUCTURE SHALL BE REMOVED WITHIN THE PROJECT AREA UNLESS OTHERWISE SPECIFIED. CONTRACTOR TO MAINTAIN POSITIVE STORMWATER OUTFALL FOR DURATION OF PROJECT. CONTRACTOR TO NOTIFY ENGINEER PRIOR TO ANY STORM DRAIN INFRASTRUCTURE REMOVAL.
3. CONTRACTOR SHALL PERFORM RECORD DRAWINGS DEPICTING ALL WATER MAINS, FITTINGS, AND VALVES, ALL SEWER MAINS AND MANHOLES, AND ALL STORM DRAIN PIPING AND BOXES REMOVED DURING DEMOLITION.
4. CONTRACTOR SHALL SUPPLY ENGINEER WITH COMPACTION TEST RESULTS FOR ANY BACKFILL REQUIRED TO BE PLACED AFTER REMOVAL OF UNDERGROUND INFRASTRUCTURE.
5. CONTRACTOR SHALL SUPPLY ENGINEER WITH COMPACTION TEST RESULTS FOR ALL BACKFILL REQUIRED TO FILL UNDERGROUND STORM SYSTEM.
6. CONTRACTOR SHALL SUBMIT DEWATERING PLAN, INCLUDING PROPOSED BMPS, TO ENGINEER PRIOR TO ANY DEWATERING ACTIVITIES. CONTRACTOR SHALL NOTIFY ENGINEER OF ANY CHANGES TO DEWATERING PLAN PRIOR TO IMPLEMENTATION.

CONTRACTOR RESPONSIBILITY NOTES:

BUILDING DEMOLITION TO OCCUR FIRST AND INCLUDE:

1. BUILDINGS, AWNINGS, WALKS, TRANSFORMERS, A/C UNITS, FENCING, SIGNS AND ANY OTHER ITEMS THAT ARE CONNECTED TO OR PART OF THE BUILDINGS.
2. OTHER ITEMS AS INDICATED ON THESE DEMOLITION PLANS.

SITE DEMOLITION TO OCCUR AFTER BUILDING DEMOLITION AND INCLUDE:

1. ALL ASPHALT PAVING, GRAVEL, CURBING, RETAINING WALLS, BRIDGES AND PONDS.
2. TREES THAT ARE INDICATED "TO BE REMOVED" ON THESE DEMOLITION PLANS.
3. STORM DRAINAGE SYSTEM, SANITARY SEWER SYSTEM, WATER SYSTEM, IRRIGATION SYSTEM AND LIGHT POLES. THIS SHALL INCLUDE ALL PIPES, MANHOLES, VALVES, VALVE BOXES, LINES, CABLES AND ALL OTHER PARTS OF THESE SYSTEMS.
4. OTHER ITEMS AS INDICATED ON THESE DEMOLITION PLANS.

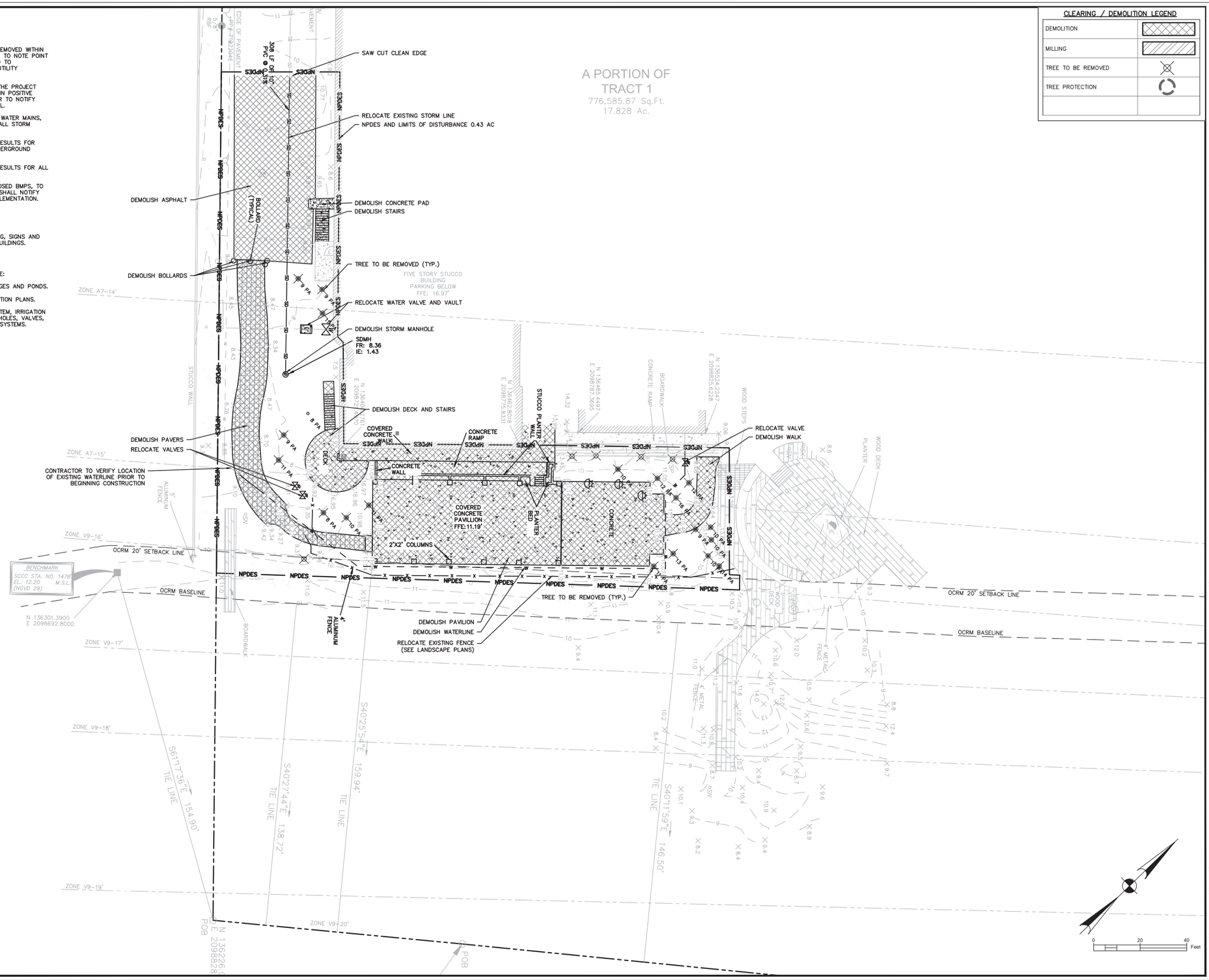

CLEARING / DEMOLITION LEGEND

DEMOLITION	
MILLING	
TREE TO BE REMOVED	
TREE PROTECTION	

SOUTH CAROLINA PROFESSIONAL ENGINEER LICENSED No. 31612 ELIZABETH L. HOWARD

SOUTH CAROLINA WARD EDWARDS, INC. No. C00152 CERTIFICATE OF AUTHORIZATION

NO.	DESCRIPTION	DATE
1	PLAN REVISIONS	
2		
3		
4		
5		
6		
7		

Ward Edwards ENGINEERING
P.O. BOX 381, BLUFFTON, SOUTH CAROLINA 29910
PH (843) 837-5250 / FAX (843) 837-2558
WWW.WARDEDWARDS.COM

WESTIN HOTEL PAVILION EXPANSION
TOWN OF HILTON HEAD ISLAND, SOUTH CAROLINA

WESTIN HILTON HEAD ISLAND RESORT AND SPA
TOWN OF HILTON HEAD ISLAND, SOUTH CAROLINA

CLEARING & DEMOLITION PLAN

☒ NOT FOR CONSTRUCTION
☐ RELEASED FOR CONSTRUCTION

PROJECT #:	150243
DATE:	09/06/16
DESIGNED BY:	ELH
CHECKED BY:	GAB
SCALE:	1"=20'

SHEET
C201

IF THIS SHEET IS LESS THAN 22" X 34" IT IS A REDUCED PRINT, SCALE ACCORDINGLY

O:\Data\Projects\150243 - Westin Expansion HHI\CAD Design Files\150243-Master.dwg, 9/13/2016 12:24:50 PM, 1:1

THIS DOCUMENT AND ALL REPRODUCIBLE COPIES OF THIS DOCUMENT ARE THE PROPERTY OF WARD EDWARDS, INC. REPRODUCTION OR ALTERATIONS OF THIS DRAWING WITHOUT THE WRITTEN CONSENT OF WARD EDWARDS, INC. IS NOT PERMITTED.

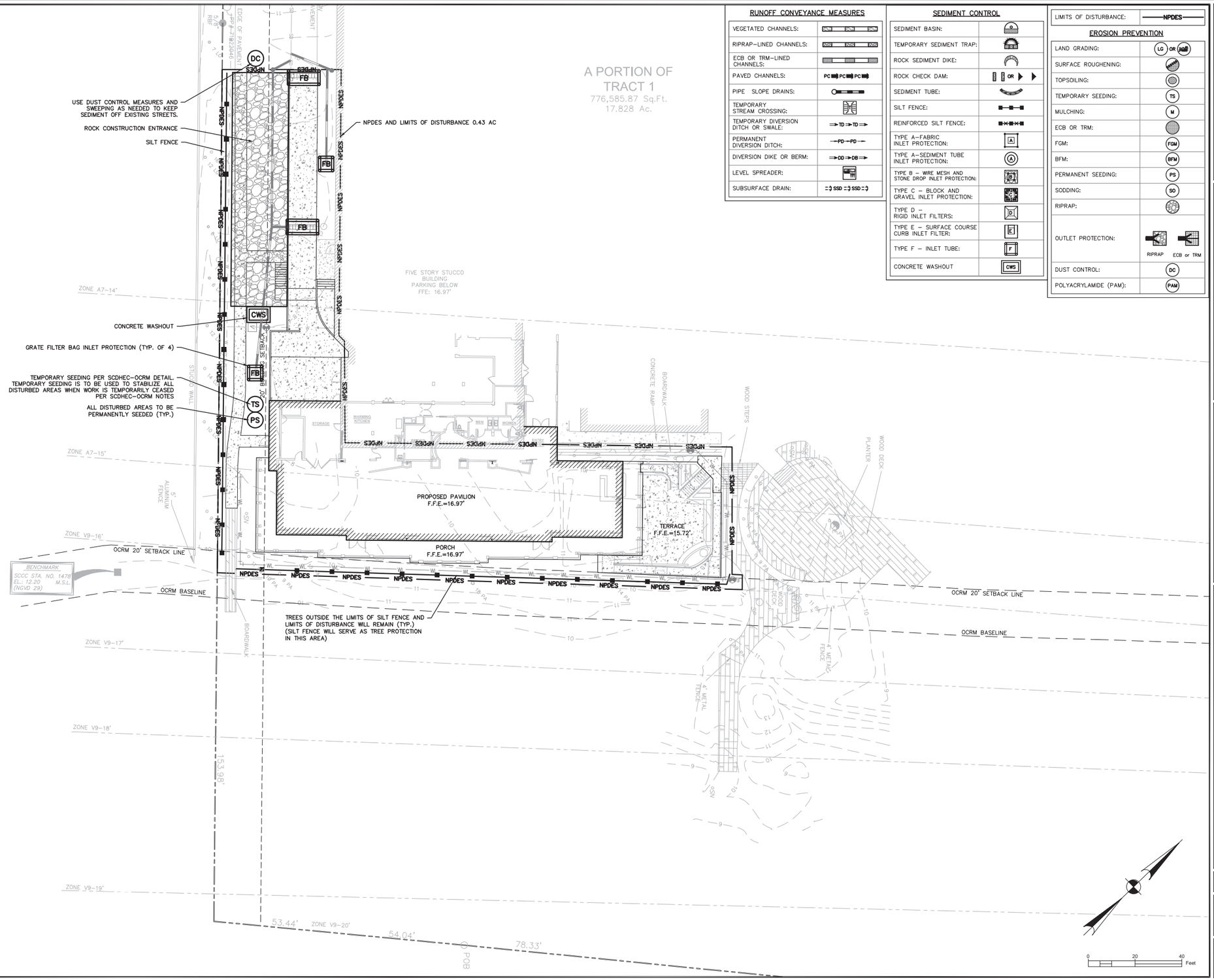

RUNOFF CONVEYANCE MEASURES

VEGETATED CHANNELS:	PC PC PC
RIPRAP-LINED CHANNELS:	PC PC PC
ECB OR TRM-LINED CHANNELS:	
PAVED CHANNELS:	PC PC PC
PIPE SLOPE DRAINS:	
TEMPORARY STREAM CROSSING:	
TEMPORARY DIVERSION DITCH OR SWALE:	TD TD
PERMANENT DIVERSION DITCH:	PD PD
DIVERSION DIKE OR BERM:	DD DB
LEVEL SPREADER:	LS
SUBSURFACE DRAIN:	SSD SSD

SEDIMENT CONTROL

SEDIMENT BASIN:	
TEMPORARY SEDIMENT TRAP:	
ROCK SEDIMENT DIKE:	
ROCK CHECK DAM:	OR
SEDIMENT TUBE:	
SILT FENCE:	
REINFORCED SILT FENCE:	
TYPE A-FABRIC INLET PROTECTION:	A
TYPE A-SEDIMENT TUBE INLET PROTECTION:	A
TYPE B - WIRE MESH AND STONE DROP INLET PROTECTION:	B
TYPE C - BLOCK AND GRAVEL INLET PROTECTION:	C
TYPE D - RIGID INLET FILTERS:	D
TYPE E - SURFACE COURSE CURB INLET FILTER:	E
TYPE F - INLET TUBE:	F
CONCRETE WASHOUT	CWS

LIMITS OF DISTURBANCE:	NPDES

EROSION PREVENTION

LAND GRADING:	LG OR
SURFACE ROUGHENING:	
TOPSOILING:	
TEMPORARY SEEDING:	TS
MULCHING:	M
ECB OR TRM:	
FGM:	FGM
BFM:	BFM
PERMANENT SEEDING:	PS
SODDING:	SO
RIPRAP:	
OUTLET PROTECTION:	RIPRAP ECB or TRM
DUST CONTROL:	DC
POLYACRYLAMIDE (PAM):	PAM

NO.	DESCRIPTION	DATE
1	PLAN REVISIONS	
2		
3		
4		
5		
6		
7		

Ward Edwards ENGINEERING
P.O. BOX 381, BLUFFTON, SOUTH CAROLINA 29910
PH (843) 837-5250 / FAX (843) 837-2558
WWW.WARDEDWARDS.COM

WESTIN HOTEL PAVILION EXPANSION
TOWN OF HILTON HEAD ISLAND, SOUTH CAROLINA

WESTIN HILTON HEAD ISLAND RESORT AND SPA
TOWN OF HILTON HEAD ISLAND, SOUTH CAROLINA

EROSION CONTROL PLAN

☒ NOT FOR CONSTRUCTION
☐ RELEASED FOR CONSTRUCTION

PROJECT #:	150245
DATE:	09/06/16
DESIGNED BY:	ELH
CHECKED BY:	GAB
SCALE:	1"=20'

SHEET
C301

IF THIS SHEET IS LESS THAN 22" X 34" IT IS A REDUCED PRINT, SCALE ACCORDINGLY

THIS DOCUMENT AND ALL REPRODUCIBLE COPIES OF THIS DOCUMENT ARE THE PROPERTY OF WARD EDWARDS, INC. REPRODUCTION OR ALTERATIONS OF THIS DRAWING WITHOUT THE WRITTEN CONSENT OF WARD EDWARDS, INC. IS NOT PERMITTED.

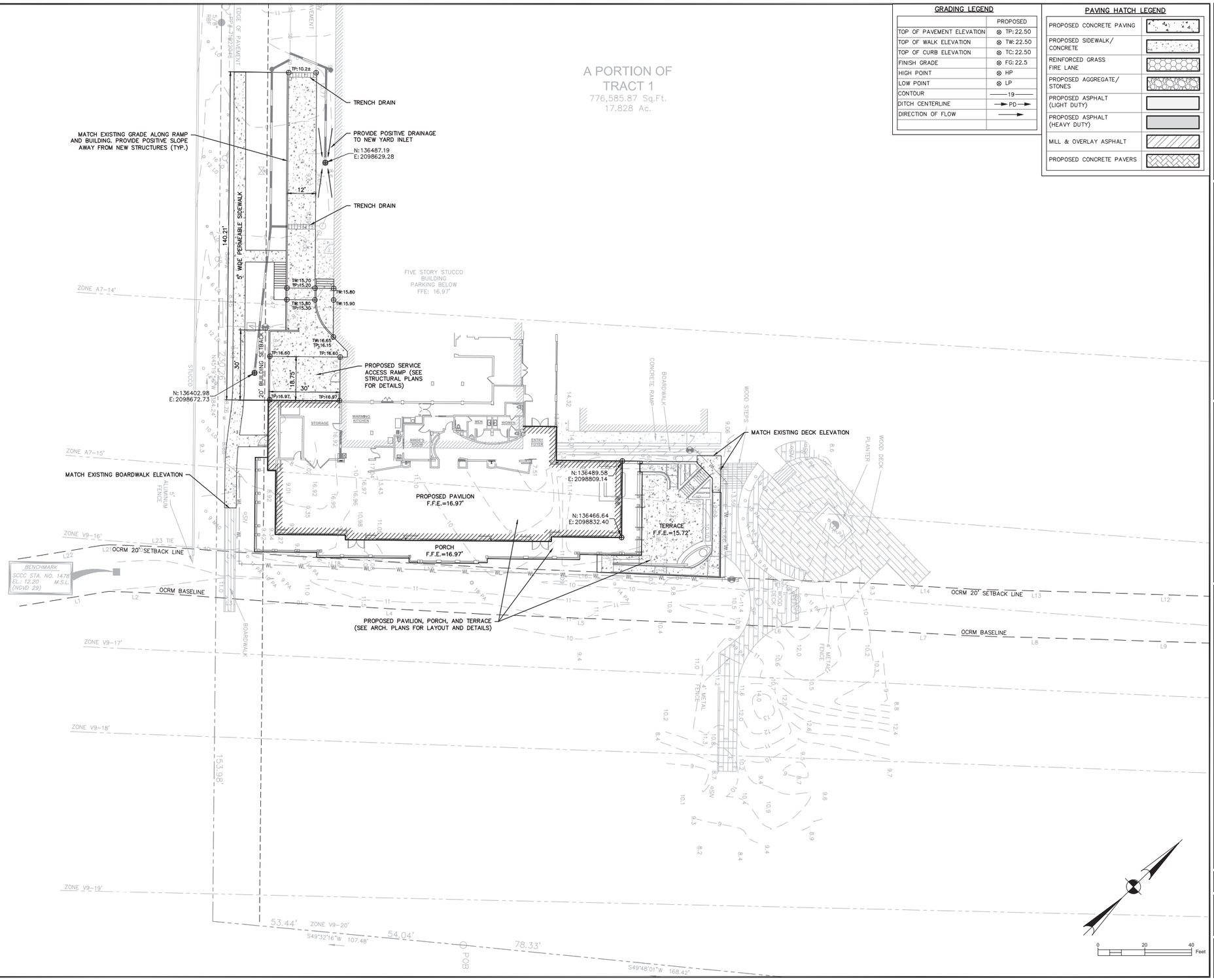

GRADING LEGEND

	PROPOSED
TOP OF PAVEMENT ELEVATION	⊗ TP: 22.50
TOP OF WALK ELEVATION	⊗ TW: 22.50
TOP OF CURB ELEVATION	⊗ TC: 22.50
FINISH GRADE	⊗ FG: 22.5
HIGH POINT	⊗ HP
LOW POINT	⊗ LP
CONTOUR	——19——
DITCH CENTERLINE	—► PD —►
DIRECTION OF FLOW	—►

PAVING HATCH LEGEND

PROPOSED CONCRETE PAVING	
PROPOSED SIDEWALK/ CONCRETE	
REINFORCED GRASS FIRE LANE	
PROPOSED AGGREGATE/ STONES	
PROPOSED ASPHALT (LIGHT DUTY)	
PROPOSED ASPHALT (HEAVY DUTY)	
MILL & OVERLAY ASPHALT	
PROPOSED CONCRETE PAVERS	

SOUTH CAROLINA PROFESSIONAL ENGINEER LICENSED No. 31612 ELIZABETH L. HOWARTH 10/04/16

SOUTH CAROLINA WARD EDWARDS, INC. No. C00152 CERTIFICATE OF AUTHORIZATION

NO.	DESCRIPTION	DATE
1	PLAN REVISIONS	
2		
3		
4		
5		
6		
7		

Ward Edwards ENGINEERING
P.O. BOX 381, BLUFFTON, SOUTH CAROLINA 29910
PH (843) 837-5250 / FAX (843) 837-2558
WWW.WARDEDWARDS.COM

WESTIN HOTEL PAVILION EXPANSION
TOWN OF HILTON HEAD ISLAND, SOUTH CAROLINA

WESTIN HILTON HEAD ISLAND RESORT AND SPA
TOWN OF HILTON HEAD ISLAND, SOUTH CAROLINA

SITE LAYOUT, PAVING AND GRADING PLAN

☒ NOT FOR CONSTRUCTION
☐ RELEASED FOR CONSTRUCTION

PROJECT #:	I50245
DATE:	09/06/16
DESIGNED BY:	ELH
CHECKED BY:	GAB
SCALE:	1"=20'

SHEET
C401

IF THIS SHEET IS LESS THAN 22" X 34" IT IS A REDUCED PRINT, SCALE ACCORDINGLY

THIS DOCUMENT AND ALL REPRODUCIBLE COPIES OF THIS DOCUMENT ARE THE PROPERTY OF WARD EDWARDS, INC. REPRODUCTION OR ALTERATIONS OF THIS DRAWING WITHOUT THE WRITTEN CONSENT OF WARD EDWARDS, INC. IS NOT PERMITTED.

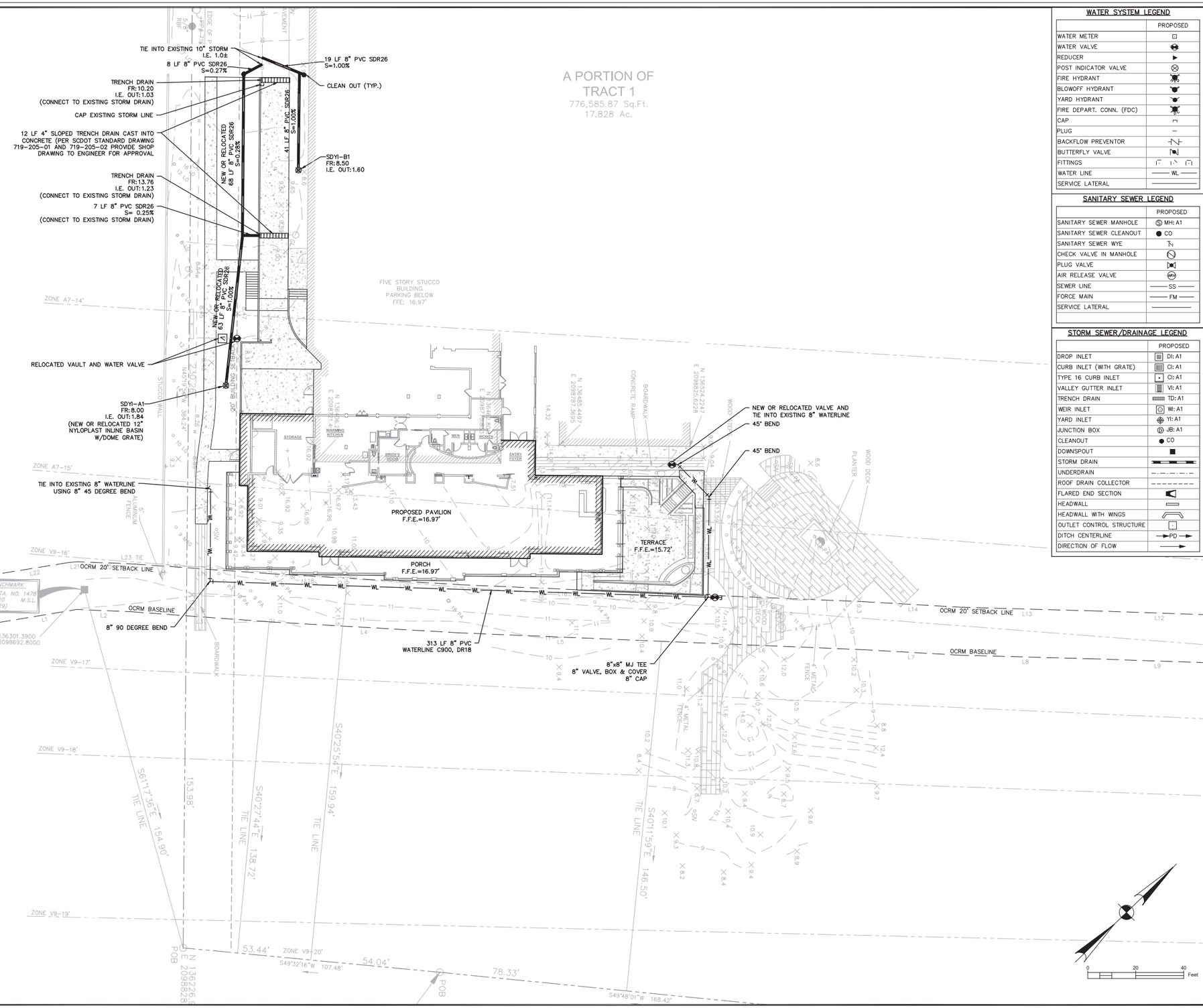

WATER SYSTEM LEGEND

	PROPOSED
WATER METER	
WATER VALVE	
REDUCER	
POST INDICATOR VALVE	
FIRE HYDRANT	
BLOWOFF HYDRANT	
YARD HYDRANT	
FIRE DEPART. CONN. (FDC)	
CAP	
PLUG	
BACKFLOW PREVENTOR	
BUTTERFLY VALVE	
FITTINGS	
WATER LINE	WL
SERVICE LATERAL	

SANITARY SEWER LEGEND

	PROPOSED
SANITARY SEWER MANHOLE	MH: A1
SANITARY SEWER CLEANOUT	CO
SANITARY SEWER WYE	
CHECK VALVE IN MANHOLE	
PLUG VALVE	
AIR RELEASE VALVE	
SEWER LINE	SS
FORCE MAIN	FM
SERVICE LATERAL	

STORM SEWER/DRAINAGE LEGEND

	PROPOSED
DROP INLET	DI: A1
CURB INLET (WITH GRATE)	CI: A1
TYPE 16 CURB INLET	CI: A1
VALLEY GUTTER INLET	VI: A1
TRENCH DRAIN	TD: A1
WEIR INLET	WI: A1
YARD INLET	YI: A1
JUNCTION BOX	JB: A1
CLEANOUT	CO
DOWNSPOUT	
STORM DRAIN	
UNDERDRAIN	
ROOF DRAIN COLLECTOR	
FLARED END SECTION	
HEADWALL	
HEADWALL WITH WINGS	
OUTLET CONTROL STRUCTURE	
DITCH CENTERLINE	PD
DIRECTION OF FLOW	

SOUTH CAROLINA PROFESSIONAL ENGINEER GABRIEL A. HOOTEN No. 31696 LICENSED 10/06/16

SOUTH CAROLINA CERTIFICATE OF AUTHORIZATION WARD EDWARDS, INC. No. C00152

NO.	DESCRIPTION	DATE
1	PLAN REVISIONS	
2		
3		
4		
5		
6		
7		

Ward Edwards
ENGINEERING
P.O. BOX 381, BLUFFTON, SOUTH CAROLINA 29910
PH (843) 837-5250 / FAX (843) 837-2558
WWW.WARDEDWARDS.COM

WESTIN HOTEL PAVILION EXPANSION
TOWN OF HILTON HEAD ISLAND, SOUTH CAROLINA

WESTIN HILTON HEAD ISLAND RESORT AND SPA
TOWN OF HILTON HEAD ISLAND, SOUTH CAROLINA

DRAINAGE & UTILITY PLAN

☒ NOT FOR CONSTRUCTION
☐ RELEASED FOR CONSTRUCTION

PROJECT #:	I50245
DATE:	09/06/16
DESIGNED BY:	ELH
CHECKED BY:	GAB
SCALE:	1"=20'

SHEET
C501

IF THIS SHEET IS LESS THAN 22" X 34" IT IS A REDUCED PRINT, SCALE ACCORDINGLY

THIS DOCUMENT AND ALL REPRODUCIBLE COPIES OF THIS DOCUMENT ARE THE PROPERTY OF WARD EDWARDS, INC. REPRODUCTION OR ALTERATIONS OF THIS DRAWING WITHOUT THE WRITTEN CONSENT OF WARD EDWARDS, INC. IS NOT PERMITTED.

O:\Data\Projects\150243 - Westin Expansion HHI\CAD Design Files\150243-Master.dwg, 9/13/2016 12:25:02 PM, 1:1

SILT FENCE INSTALLATION

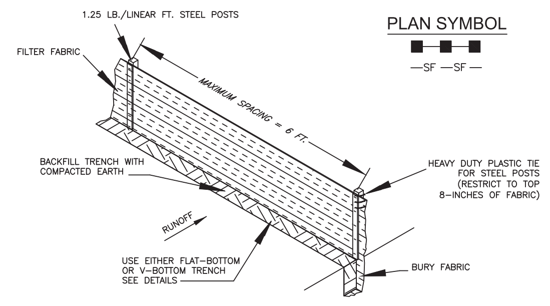

FLAT-BOTTOM TRENCH DETAIL

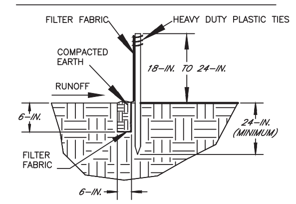

V-SHAPED TRENCH DETAIL

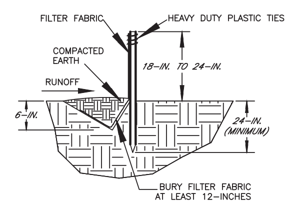

SILT FENCE – GENERAL NOTES

1. Do not place silt fence across channels or in other areas subject to concentrated flows. Silt fence should not be used as a velocity control BMP. Concentrated flows are any flows greater than 0.5 cfs.
2. Maximum sheet or overland flow path length to the silt fence shall be 100–feet.
3. Maximum slope steepness (normal [perpendicular] to the fence line) shall be 2:1.
4. Silt fence joints, when necessary, shall be completed by one of the following options:
   - Wrap each fabric together at a support post with both ends fastened to the post, with a 1–foot minimum overlap;
   - Overlap silt fence by installing 3–feet passed the support post to which the new silt fence roll is attached. Attach old roll to new roll with heavy–duty plastic ties; or,
   - Overlap entire width of each silt fence roll from one support post to the next support post.
5. Attach filter fabric to the steel posts using heavy–duty plastic ties that are evenly spaced within the top 8–inches of the fabric.
6. Install the silt fence perpendicular to the direction of the stormwater flow and place the silt fence the proper distance from the toe of steep slopes to provide sediment storage and access for maintenance and cleanout.
7. Install Silt Fence Checks (Tie–Backs) every 50–100 feet, dependent on slope, along silt fence that is installed with slope and where concentrated flows are expected or are documented along the proposed/installed silt fence.

South Carolina Department of Health and Environmental Control
SILT FENCE
STANDARD DRAWING NO. SC–03 Page 1 of 2
NOT TO SCALE — FEBRUARY 2014 DATE

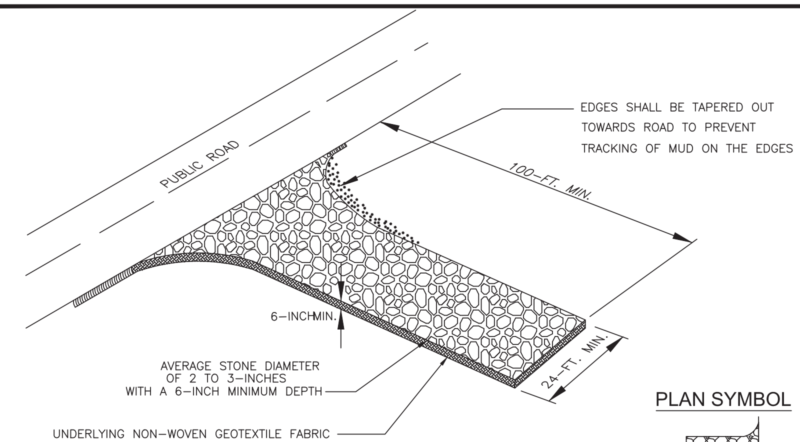

PLAN SYMBOL

SPECIFICATION	SIZE
ROCK PAD THICKNESS	6 INCHES
ROCK PAD WIDTH	24 FEET
ROCK PAD LENGTH	100 FEET
ROCK PAD STONE SIZE	D = 2–3 INCHES

South Carolina Department of Health and Environmental Control
CONSTRUCTION ENTRANCE
STANDARD DRAWING NO. SC–06 PAGE 1 of 2
NOT TO SCALE — FEBRUARY 2014 DATE

TEMPORARY SEEDING – COASTAL

SPECIES	LBS/AC	JAN	FEB	MAR	APR	MAY	JUN	JUL	AUG	SEP	OCT	NOV	DEC
SANDY, DROUGHTY SITES													
BROWNTOP MILLET	40 LBS/AC			X	X	X	X	X	X				
RYE, GRAIN	56 LBS/AC	X	X	X						X	X	X	X
RYEGRASS	50 LBS/AC	X	X	X	X					X	X	X	X
WELL DRAINED, CLAYEY/LOAMEY SITES													
BROWNTOP MILLET OR JAPANESE MILLET	40 LBS/AC			X	X	X	X	X	X				
RYE, GRAIN OR OATS	56 LBS/AC 75 LBS/AC	X	X	X						X	X	X	X
RYEGRASS	50 LBS/AC	X	X	X	X					X	X	X	X

(TS) TEMPORARY SEEDING - COASTAL
DETAIL 02370-011

SILT FENCE – POST REQUIREMENTS

1. Silt Fence posts must be 48–inch long steel posts that meet, at a minimum, the following physical characteristics.
   - Composed of a high strength steel with a minimum yield strength of 50,000 psi.
   - Include a standard "T" section with a nominal face width of 1.38–inches and a nominal "T" length of 1.48–inches.
   - Weigh 1.25 pounds per foot (± 8%)
2. Posts shall be equipped with projections to aid in fastening of filter fabric.
3. Steel posts may need to have a metal soil stabilization plate welded near the bottom when installed along steep slopes or installed in loose soils. The plate should have a minimum cross section of 17–square inches and be composed of 15 gauge steel, at a minimum. The metal soil stabilization plate should be completely buried.
4. Install posts to a minimum of 24–inches. A minimum height of 1– to 2–inches above the fabric shall be maintained, and a maximum height of 3 feet shall be maintained above the ground.
5. Post spacing shall be at a maximum of 6–feet on center.

SILT FENCE – FABRIC REQUIREMENTS

1. Silt fence must be composed of woven geotextile filter fabric that consists of the following requirements:
   - Composed of fibers consisting of long chain synthetic polymers of at least 85% by weight of polyolefins, polyesters, or polyamides that are formed into a network such that the filaments or yarns retain dimensional stability relative to each other;
   - Free of any treatment or coating which might adversely alter its physical properties after installation;
   - Free of any defects or flaws that significantly affect its physical and/or filtering properties; and,
   - Have a minimum width of 36–inches.
2. Use only fabric appearing on SC DOT's Qualified Products Listing (QPL), Approval Sheet #34, meeting the requirements of the most current edition of the SC DOT Standard Specifications for Highway Construction.
3. 12–inches of the fabric should be placed within excavated trench and toed in when the trench is backfilled.
4. Filter Fabric shall be purchased in continuous rolls and cut to the length of the barrier to avoid joints.
5. Filter Fabric shall be installed at a minimum of 24–inches above the ground.

SILT FENCE – INSPECTION & MAINTENANCE

1. The key to functional silt fence is weekly inspections, routine maintenance, and regular sediment removal.
2. Regular inspections of silt fence shall be conducted once every calendar week and, as recommended, within 24–hours after each rainfall even that produces 1/2–inch or more of precipitation.
3. Attention to sediment accumulations along the silt fence is extremely important. Accumulated sediment should be continually monitored and removed when necessary.
4. Remove accumulated sediment when it reaches 1/3 the height of the silt fence.
5. Removed sediment shall be placed in stockpile storage areas or spread thinly across disturbed area. Stabilize the removed sediment after it is relocated.
6. Check for areas where stormwater runoff has eroded a channel beneath the silt fence, or where the fence has sagged or collapsed due to runoff overtopping the silt fence. Install checks/tie–backs and/or reinstall silt fence, as necessary.
7. Check for tears within the silt fence, areas where silt fence has begun to decompose, and for any other circumstance that may render the silt fence ineffective. Removed damaged silt fence and reinstall new silt fence immediately.
8. Silt fence should be removed within 30 days after final stabilization is achieved and once it is removed, the resulting disturbed area shall be permanently stabilized.

South Carolina Department of Health and Environmental Control
SILT FENCE
STANDARD DRAWING NO. SC–03 PAGE 2 of 2
GENERAL NOTES — FEBRUARY 2014 DATE

CONSTRUCTION ENTRANCE – GENERAL NOTES

1. Stabilized construction entrances should be used at all points where traffic will egress/ingress a construction site onto a public road or any impervious surfaces, such as parking lots.
2. Install a non–woven geotextile fabric prior to placing any stone.
3. Install a culvert pipe across the entrance when needed to provide positive drainage.
4. The entrance shall consist of 2–inch to 3–inch D50 stone placed at a minimum depth of 6–inches.
5. Minimum dimensions of the entrance shall be 24–feet wide by 100–feet long, and may be modified as necessary to accommodate site constraints.
6. The edges of the entrance shall be tapered out towards the road to prevent tracking at the edge of the entrance.
7. Divert all surface runoff and drainage from the stone pad to a sediment trap or basin or other sediment trapping structure.
8. Limestone may not be used for the stone pad.

CONSTR. ENTRANCE – INSPECTION & MAINTENANCE

1. The key to functional construction entrances is weekly inspections, routine maintenance, and regular sediment removal.
2. Regular inspections of construction entrances shall be conducted once every calendar week and, as recommended, within 24–hours after each rainfall even that produces 1/2–inch or more of precipitation.
3. During regular inspections, check for mud and sediment buildup and pad integrity. Inspection frequencies may need to be more frequent during long periods of wet weather.
4. Reshape the stone pad as necessary for drainage and runoff control.
5. Wash or replace stones as needed and as directed by site inspector. The stone in the entrance should be washed or replaced whenever the entrance fails to reduce the amount of mud being carried off–site by vehicles. Frequent washing will extend the useful life of stone pad.
6. Immediately remove mud and sediment tracked or washed onto adjacent impervious surfaces by brushing or sweeping. Flushing should only be used when the water can be discharged to a sediment trap or basin.
7. During maintenance activities, any broken pavement should be repaired immediately.
8. Construction entrances should be removed after the site has reached final stabilization. Permanent vegetation should replace areas from which construction entrances have been removed, unless area will be converted to an impervious surface to serve post–construction.

South Carolina Department of Health and Environmental Control
CONSTRUCTION ENTRANCE
STANDARD DRAWING NO. SC–06 PAGE 2 of 2
GENERAL NOTES — FEBRUARY 2014 DATE

PERMANENT SEEDING – COASTAL

SPECIES	LBS/AC	JAN	FEB	MAR	APR	MAY	JUN	JUL	AUG	SEP	OCT	NOV	DEC
SANDY, DROUGHTY SITES													
BROWNTOP MILLET BAHIAGRASS	10 LBS/AC 40 LBS/AC			X	X	X	X	X	X				
BROWNTOP MILLET BAHIAGRASS SERICEA LESPEDEZA	10 LBS/AC 30 LBS/AC 40 LBS/AC			X	X	X	X	X	X				
BROWNTOP MILLET ATLANTIC COASTAL PANICGRASS	10 LBS/AC 15 LBS/AC PLS			X	X	X	X						
BROWNTOP MILLET SWITCHGRASS (ALAMO) LITTLE BLUESTEM SERICEA LESPEDEZA	10 LBS/AC 8 LBS/AC PLS 4 LBS/AC 20 LBS/AC			X	X	X	X						
BROWNTOP MILLET WEEPING LOVEGRASS	10 LBS/AC 8 LBS/AC			X	X	X	X						
WELL DRAINED, CLAYEY/LOAMEY SITES													
BROWNTOP MILLET BAHIAGRASS	10 LBS/AC 40 LBS/AC			X	X	X	X	X	X				
RYE, GRAIN BAHIAGRASS CLOVER, CRIMSON (ANNUAL)	10 LBS/AC 40 LBS/AC 5 LBS/AC									X	X		
BROWNTOP MILLET BAHIAGRASS SERICEA LESPEDEZA	10 LBS/AC 30 LBS/AC 40 LBS/AC			X	X	X	X	X	X				
BROWNTOP MILLET BERMUDA, COMMON SERICEA LESPEDEZA	10 LBS/AC 10 LBS/AC 40 LBS/AC			X	X	X	X	X	X				
BROWNTOP MILLET BERMUDA, COMMON KOBE LESPEDEZA (ANNUAL)	10 LBS/AC 12 LBS/AC 10 LBS/AC			X	X	X	X	X	X				
BROWNTOP MILLET BAHIAGRASS BERMUDA, COMMON SERICEA LESPEDEZA	10 LBS/AC 20 LBS/AC 6 LBS/AC 40 LBS/AC			X	X	X	X	X	X				
BROWNTOP MILLET SWITCHGRASS LITTLE BLUESTEM INDIANGRASS	10 LBS/AC 8 LBS/AC PLS 3 LBS/AC PLS 3 LBS/AC PLS			X	X	X	X	X	X				

(PS) PERMANENT SEEDING - COASTAL
DETAIL 02370-010

ADHESIVE	WATER DILUTION	NOZZLE TYPE	APPLICATION (GAL./ACRE)
ANIONIC ASPHALT EMULSION	7:1*	COARSE SPRAY	1,200
LATEX EMULSION	12.5:1*	FINE SPRAY	235
RESIN–IN–WATER EMULSION	4:1*	FINE SPRAY	300

*USE MANUFACTURER'S RECOMMENDATIONS WHEN AVAILABLE.

MAINTENANCE:
- PROHIBIT TRAFFIC ON SURFACE AFTER SPRAYING.
- SUPPLEMENT SURFACE COVERING AS NEEDED.

INSTALLATION:
- APPLY ACCORDING TO APPROVED PLAN.
- MULCH DISTURBED AREAS AMD TACKIFY WITH RESINS SUCH AS ASPHALT, CURASOL OR TERRATACK ACCORDING TO MANUFACTURER'S RECOMMENDATIONS.
- STABILIZE DISTURBED AREAS WITH TEMPORARY OR PERMANENT VEGETATION.
- IRRIGATE DISTURBED AREAS UNTIL SURFACE IS WET.
- COVER SURFACES WITH CRUSHED STONE OR GRAVEL.
- APPLY CALCIUM CHLORIDE AT A RATE TO KEEP SURFACES MOIST.
- APPLY SPRAY–ON ADHESIVES TO MINERAL SOILS (NOT MUCK SOILS) AS DESCRIBED IN TABLE 1.

(DC) DUST CONTROL ON DISTURBED AREAS

STRAW BALE BARRIER CONCRETE WASHOUT

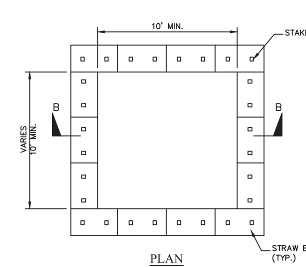

PLAN
TYPE "ABOVE GRADE" WITH STRAW BALES

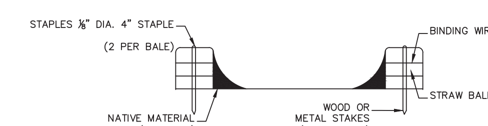

SECTION B-B

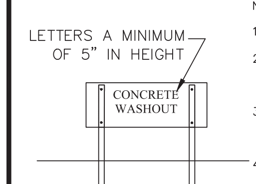

CONCRETE WASHOUT SIGN DETAIL

NOTES:

1. ACTUAL LAYOUT DETERMINED IN FIELD.
2. INSTALL CONCRETE WASHOUT SIGN (24"X24", MINIMUM) WITHIN 30' OF THE TEMPORARY CONCRETE WASHOUT FACILITY.
3. TEMPORARY WASHOUT AREA MUST BE AT LEAST 50' FROM A STORM DRAIN, CREEK BANK OR PERIMETER CONTROL.
4. CLEAN OUT CONCRETE WASHOUT AREA WHEN 50% FULL.
5. THE KEY TO FUNCTIONAL CONCRETE WASHOUTS IS WEEKLY INSPECTIONS, ROUTINE MAINTENANCE, AND REGULAR CLEAN OUT.
6. SILT FENCE SHALL BE INSTALLED AROUND PERIMETER OF CONCRETE WASHOUT AREA EXCEPT FOR THE SIDE UTILIZED FOR ACCESSING THE WASHOUT.
7. A ROCK CONSTRUCTION ENTRANCE MAY BE NECESSARY ALONG ONE SIDE OF THE WASHOUT TO PROVIDE VEHICLE ACCESS.

CWS

South Carolina Department of Health and Environmental Control
CONCRETE WASHOUT
STRAW BALES OR ABOVE GROUND
STANDARD DRAWING NO. RC–07 PAGE 1 of 1
NOT TO SCALE — FEBRUARY 2014 DATE

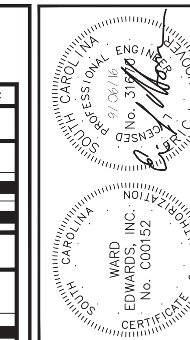

NO.	DESCRIPTION	DATE
1		
2		
3		
4		
5		
6		
7		

PLAN REVISIONS

Ward Edwards
ENGINEERING
P.O. BOX 381, BLUFFTON, SOUTH CAROLINA 29910
PH (843) 837-5250 / FAX (843) 837-2558
WWW.WARDEDWARDS.COM

WESTIN HOTEL PAVILION EXPANSION
TOWN OF HILTON HEAD ISLAND, SOUTH CAROLINA

WESTIN HILTON HEAD ISLAND RESORT AND SPA
TOWN OF HILTON HEAD ISLAND, SOUTH CAROLINA

CONSTRUCTION DETAILS

☑ NOT FOR CONSTRUCTION
☐ RELEASED FOR CONSTRUCTION

PROJECT #:	150243
DATE:	09/06/16
DESIGNED BY:	ELH
CHECKED BY:	GAB
SCALE:	AS NOTED

SHEET
C601

THIS DOCUMENT AND ALL REPRODUCIBLE COPIES OF THIS DOCUMENT ARE THE PROPERTY OF WARD EDWARDS, INC. REPRODUCTION OR ALTERATIONS OF THIS DRAWING WITHOUT THE WRITTEN CONSENT OF WARD EDWARDS, INC. IS NOT PERMITTED.

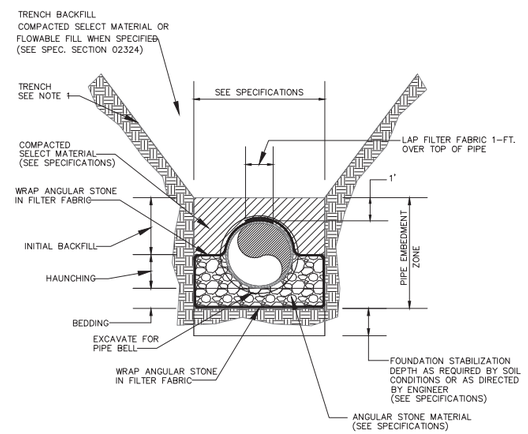

NOTE 1: DEPTH OF VERTICAL TRENCH AND SIDE SLOPES OF TRENCH MAY VARY DEPENDING ON DEPTH OF EXCAVATION AND TRENCH PROTECTION SYSTEM USED. COMPLY WITH OSHA REGULATIONS (STANDARDS – 29 CFR) PART 1956 SUBPART P, EXCAVATIONS.

EMBEDMENT DETAIL FOR THERMOPLASTIC GRAVITY SEWERS AND DRAINS

DETAIL 02537 - XX

SCALE: NONE

NYLOPLAST DRAIN BASIN WITH DOME GRATE

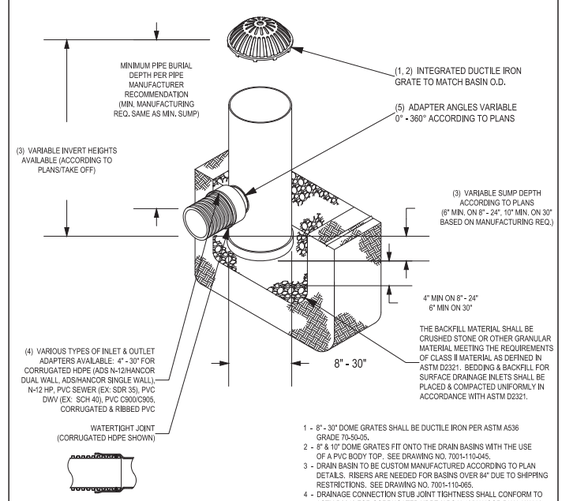

1 - 8' - 30" DOME GRATES SHALL BE DUCTILE IRON PER ASTM A536 GRADE 70-50-05.
2 - 8" & 10" DOME GRATES FIT ONTO THE DRAIN BASINS WITH THE USE OF A PVC BODY TOP. SEE DRAWING NO. 7001-110-045.
3 - DRAIN BASIN TO BE CUSTOM MANUFACTURED ACCORDING TO PLAN DETAILS. RISERS ARE NEEDED FOR BASINS OVER 84" DUE TO SHIPPING RESTRICTIONS. SEE DRAWING NO. 7001-110-065.
4 - DRAINAGE CONNECTION STUB JOINT TIGHTNESS SHALL CONFORM TO ASTM D3212 FOR CORRUGATED HDPE (ADS N-12/HANCOR DUAL WALL), N-12 HP, & PVC SEWER (4" - 24").
5 - ADAPTERS CAN BE MOUNTED ON ANY ANGLE 0° TO 360°, TO DETERMINE MINIMUM ANGLE BETWEEN ADAPTERS SEE DRAWING NO. 7001-110-012.
6 - 8" - 30" DOME GRATES HAVE NO LOAD RATING.

THIS PRINT DISCLOSES SUBJECT MATTER IN WHICH NYLOPLAST HAS PROPRIETARY RIGHTS. THE RECEIPT OR POSSESSION OF THIS PRINT DOES NOT CONFER, TRANSFER, OR LICENSE THE USE OF THE DESIGN OR TECHNICAL INFORMATION SHOWN HEREIN. REPRODUCTION OF THIS PRINT OR ANY INFORMATION CONTAINED HEREIN, OR MANUFACTURE OF ANY ARTICLE HEREFROM, FOR THE DISCLOSURE TO OTHERS IS FORBIDDEN, EXCEPT BY SPECIFIC WRITTEN PERMISSION FROM NYLOPLAST. ©2011 NYLOPLAST

DRAWN BY	EBC	MATERIAL	
DATE	3-25-10		
REVISED BY	EBC	PROJECT NO./NAME	
DATE	2-25-11		
DWG SIZE	A	SCALE 1:40	SHEET 1 OF 1

Nyloplast — 3130 VERONA AVE, BUFORD, GA 30518, PHN (770) 932-2443, FAX (770) 932-2490, www.nyloplastusa.com

TITLE: DRAIN BASIN WITH DOME GRATE QUICK SPEC INSTALLATION DETAIL

DWG NO. 7001-110-397 REV B

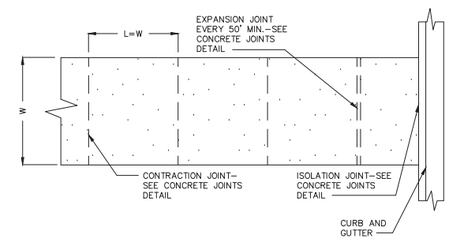

NOTES:

1. W = VARIES, REFER TO STAKING PLAN. FILL IN BASED ON SITE PLAN
2. L = WIDTH OF PAVING UNLESS OTHERWISE INDICATED ON PLAN.
3. SLOPE = AS INDICATED ON GRADING PLAN, NOT TO EXCEED 2% CROSS OR 8.33% LONGITUDINAL.
4. ALL CONCRETE SHALL BE CLASS A 3000 PSI.
5. FINISH: BROOM WITH HAND TOOLED JOINTS AND EDGES.

SECTION

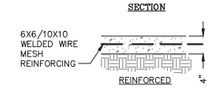

CONCRETE SIDEWALK

DETAIL 03300-006

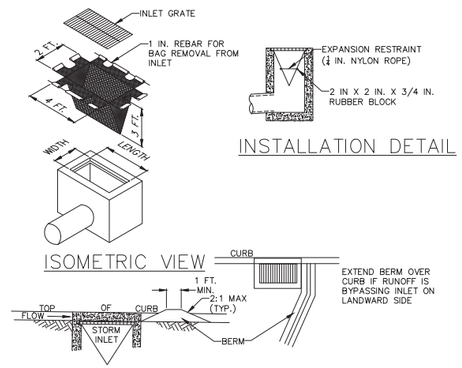

NOTES:

MAXIMUM DRAINAGE AREA = 1/2 ACRE.

INLET PROTECTION SHALL NOT BE REQUIRED FOR INLET TRIBUTARY TO SEDIMENT BASIN OR TRAP. BERMS SHALL BE REQUIRED FOR ALL INSTALLATIONS.

ROLLED EARTHEN BERM SHALL BE MAINTAINED UNTIL ROADWAY IS STONED. ROAD SUBBASE BERM SHALL BE MAINTAINED UNTIL ROADWAY IS PAVED. SIX INCH MINIMUM HEIGHT ASPHALT BERM SHALL BE MAINTAINED UNTIL ROADWAY SURFACE RECEIVES FINAL COAT.
AT A MINIMUM, THE FABRIC SHALL HAVE A MINIMUM GRAB TENSILE STRENGTH OF 120 LBS, A MINIMUM BURST STRENGTH OF 200 PSI, AND A MINIMUM TRAPEZOIDAL TEAR STRENGTH OF 50 LBS. FILTER BAGS SHALL BE CAPABLE OF TRAPPING ALL PARTICLES NOT PASSING A NO. 40 SIEVE.

INLET FILTER BAGS SHALL BE INSPECTED ON A WEEKLY BASIS AND AFTER EACH RUNOFF EVENT. BAGS SHALL BE EMPTIED AND RINSED OR REPLACED WHEN HALF FULL OR WHEN FLOW CAPACITY HAS BEEN REDUCED SO AS TO CAUSE FLOODING OR BYPASSING OF THE INLET. DAMAGED OR CLOGGED BAGS SHALL BE REPLACED. A SUPPLY SHALL BE MAINTAINED ON SITE FOR REPLACEMENT OF BAGS. ALL NEEDED REPAIRS SHALL BE INITIATED IMMEDIATELY AFTER THE INSPECTION. DISPOSE OF ACCUMULATED SEDIMENT AS WELL AS ALL USED BAGS ACCORDING TO THE PLAN NOTES.

DO NOT USE ON MAJOR PAVED ROADWAYS WHERE PONDING MAY CAUSE TRAFFIC HAZARDS.

FILTER BAG GRATE INLET PROTECTION

NO SCALE

NON TRAFFIC INSTALLATION

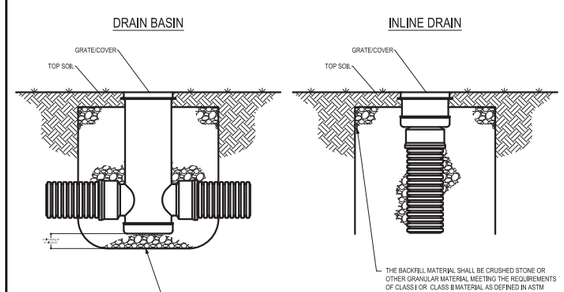

THIS PRINT DISCLOSES SUBJECT MATTER IN WHICH NYLOPLAST HAS PROPRIETARY RIGHTS. THE RECEIPT OR POSSESSION OF THIS PRINT DOES NOT CONFER, TRANSFER, OR LICENSE THE USE OF THE DESIGN OR TECHNICAL INFORMATION SHOWN HEREIN. REPRODUCTION OF THIS PRINT OR ANY INFORMATION CONTAINED HEREIN, OR MANUFACTURE OF ANY ARTICLE HEREFROM, FOR THE DISCLOSURE TO OTHERS IS FORBIDDEN, EXCEPT BY SPECIFIC WRITTEN PERMISSION FROM NYLOPLAST. ©2011 NYLOPLAST

DRAWN BY	CJA	MATERIAL	
DATE	9-30-09		
REVISED BY	CCA	PROJECT NO./NAME	
DATE	12-29-11		
DWG SIZE	A	SCALE 1:25	SHEET 1 OF 1

Nyloplast — 3130 VERONA AVE, BUFORD, GA 30518, PHN (770) 932-2443, FAX (770) 932-2490, www.nyloplastusa.com

TITLE: DRAIN BASIN & INLINE DRAIN NON TRAFFIC INSTALLATION

DWG NO. 7001-110-411 REV D

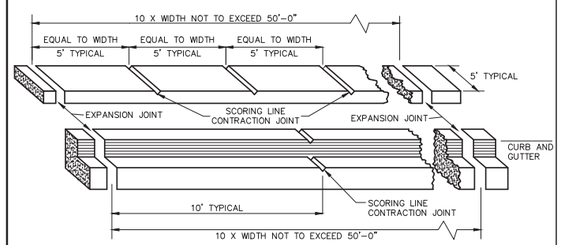

ISOMETRIC

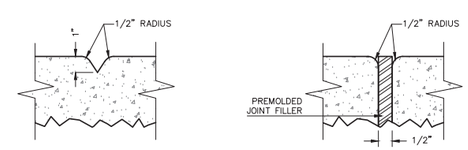

CONTRACTION JOINT SCORING LINE

EXPANSION JOINT

NOTES:

1. EXPANSION JOINTS, 1/2 INCH THICK, SHALL BE PLACED IN THE SIDEWALK AND CURBING AT THE POINT OF CURVATURE (PC) AND POINT OF TANGENCY (PT) OF ALL CURVES, AT THE OUTER EDGES OF DRIVEWAYS, AND AT UNIFORM INTERVALS AS SHOWN. EXPANSION JOINTS SHALL MEET SCDOT SPECIFICATION SECTION 702.2.2.1.
2. TRANSVERSE SCORING LINES (CONTRACTION JOINTS) IN THE SIDEWALK SHALL BE PLACED BETWEEN EXPANSION JOINTS AT UNIFORM INTERVALS EQUAL TO THE WIDTH OF THE WALK AS SHOWN.
3. LONGITUDINAL SCORING LINES WILL BE REQUIRED IN WALKS WIDER THAN 5 FEET OR AS DIRECTED BY THE ENGINEER.
4. TRANSVERSE CONTRACTION JOINTS IN THE CURBING SHALL BE PLACED BETWEEN EXPANSION JOINTS AT UNIFORM 10' INTERVALS.
5. TRANSVERSE AND LONGITUDINAL SCORING LINES SHALL BE A DEPTH OF 1" AND NOT LESS THAN 1/4 INCH OR MORE THAN 1/2 INCH IN WIDTH. THE CORNERS OF THE SCORING LINES SHALL HAVE A 1/2 INCH MINIMUM RADII.
6. JOINTS IN THE CURB AND GUTTER SHALL ALIGN WITH CORRESPONDING JOINTS IN THE SIDEWALK.

EXPANSION JOINTS AND SCORING LINES

DETAIL 03300-007A

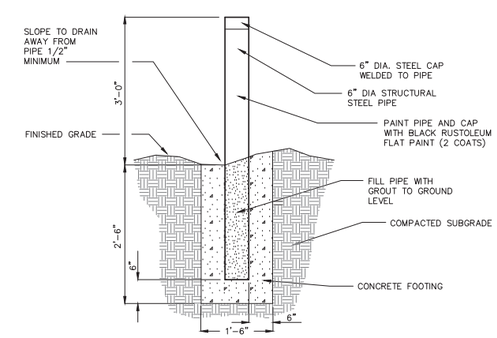

STEEL BOLLARD

DETAIL 06050-004

NO.	DESCRIPTION	DATE
7		
6		
5		
4		
3		
2		
1	PLAN REVISIONS	

Ward Edwards ENGINEERING
P.O. BOX 381, BLUFFTON, SOUTH CAROLINA 29910
PH (843) 837-5250 / FAX (843) 837-2558
WWW.WARDEDWARDS.COM

WESTIN HOTEL PAVILION EXPANSION
TOWN OF HILTON HEAD ISLAND, SOUTH CAROLINA
WESTIN HILTON HEAD ISLAND RESORT AND SPA
TOWN OF HILTON HEAD ISLAND, SOUTH CAROLINA

CONSTRUCTION DETAILS

☑ NOT FOR CONSTRUCTION
☐ RELEASED FOR CONSTRUCTION

PROJECT #:	I50243
DATE:	09/06/16
DESIGNED BY:	ELH
CHECKED BY:	GAB
SCALE:	AS NOTED

SHEET
C602

O:\Data\Projects\I50243 - Westin Expansion HHI\CAD Design Files\I50243-Master.dwg, 9/13/2016 12:25:05 PM, 1:1

IF THIS SHEET IS LESS THAN 22" X 34" IT IS A REDUCED PRINT, SCALE ACCORDINGLY

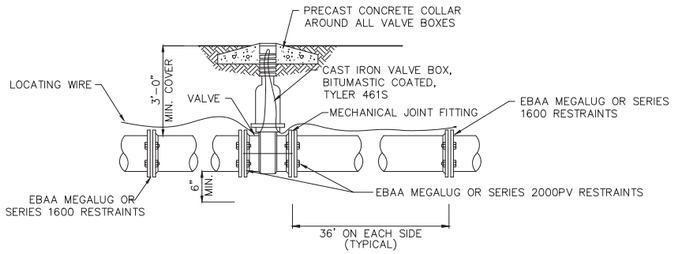

GATE VALVE SETTING DETAIL

NOT TO SCALE

HILTON HEAD NO. 1 PUBLIC SERVICE DISTRICT		
GATE VALVE SETTING DETAIL		
APPROVED BY: LC	DATE: Feb. 1997	DRAWING NO. VIII–3
SCALE: NTS	REVISED: JAN. 2001	

NOTE:

1.) ALL FITTINGS SHALL BE MECHANICAL JOINTS.

2.) TRACER WIRE SHALL BE LOOPED TO THE TOP OF THE VALVE BOX.

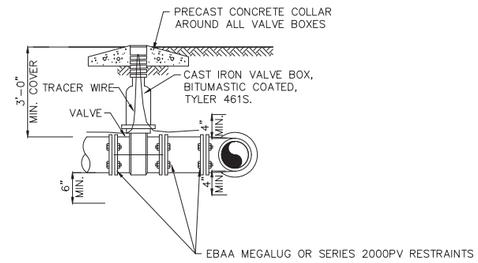

VALVE & TEE SETTING DETAIL

NOT TO SCALE

HILTON HEAD NO. 1 PUBLIC SERVICE DISTRICT		
VALVE & TEE SETTING DETAIL		
APPROVED BY: LC	DATE: Feb. 1997	DRAWING NO. VIII–4
SCALE: NTS	REVISED: JAN. 2001	

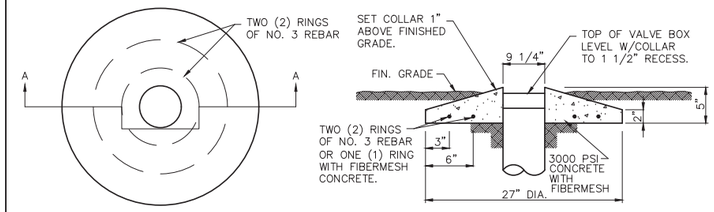

PRECAST CONCRETE COLLAR DETAIL

NOT TO SCALE

HILTON HEAD NO. 1 PUBLIC SERVICE DISTRICT		
PRECAST CONCRETE COLLAR DETAIL		
APPROVED BY: LC	DATE: Feb. 1997	DRAWING NO. VIII–6
SCALE: NTS	REVISED: XXXXXXX	

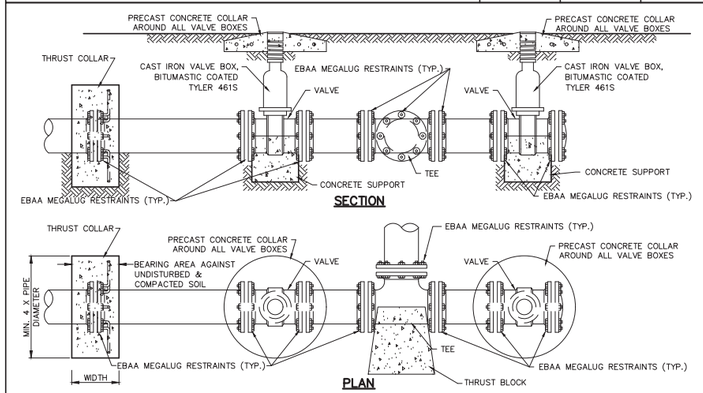

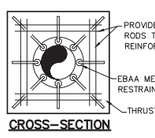

MINIMUM BLOCKING DIMENSIONS			
PIPE SIZE (Inches)	BLOCKING BEARING AREA (Ft.2)	BLOCKING WIDTH (Inches)	# THREADED RODS
4	2	24	4
6	4	24	4
8	7	36	6
10	11	36	6
12	15	36	6
OVER 12" BY THE DESIGN ENGINEER.			

THE MINIMUM DIMENSIONS TABLE IS BASED ON AN ASSUMED SOIL BEARING OF 2000 LBS. PER SQ. FT. IF BEARING VALUE FOR SOIL IS LESS, THEN AREA SHOWN HEREIN SHOULD BE INCREASED ACCORDINGLY.

HILTON HEAD NO. 1 PUBLIC SERVICE DISTRICT		
THRUST COLLAR DETAIL		
APPROVED BY: XXXXXXX	DATE: APRIL, 1997	DRAWING NO. VIII–11
SCALE: NTS	REVISED: XXXXXXX	

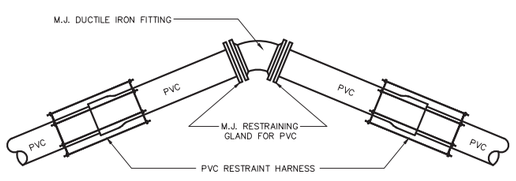

RESTRAINED JOINT FITTING DETAIL

NOT TO SCALE

HILTON HEAD NO. 1 PUBLIC SERVICE DISTRICT		
RESTRAINED JOINT FITTING		
APPROVED BY: LC	DATE: DEC. 1998	DRAWING NO. VIII–13
SCALE: NTS	REVISED: XXXXXXX	

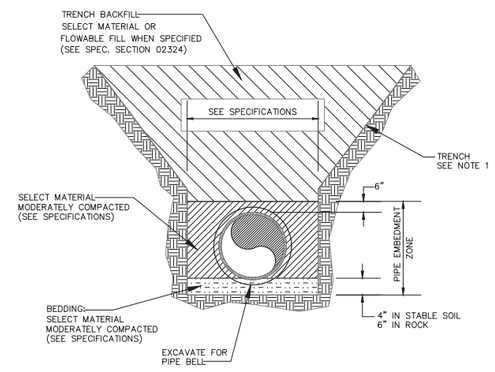

TYPICAL FOR STABLE TRENCH

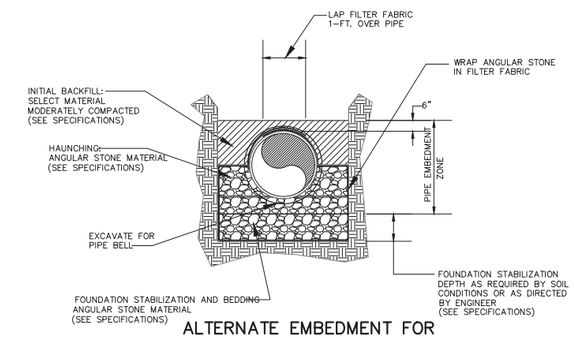

ALTERNATE EMBEDMENT FOR SOFT OR UNSTABLE FOUNDATION

NOTE 1: DEPTH OF VERTICAL TRENCH AND SIDE SLOPES OF TRENCH MAY VARY DEPENDING ON DEPTH OF EXCAVATION AND TRENCH PROTECTION SYSTEM USED. COMPLY WITH OSHA REGULATIONS (STANDARDS – 29 CFR) PART 1956 SUBPART P, EXCAVATIONS.

EMBEDMENT DETAIL FOR PRESSURE PIPE LINES

DETAIL 02514 - XX

SCALE: NONE

NO.	DESCRIPTION	DATE
1	PLAN REVISIONS	
2		
3		
4		
5		
6		
7		

Ward Edwards ENGINEERING
P.O. BOX 381, BLUFFTON, SOUTH CAROLINA 29910
PH (843) 837-5250 / FAX (843) 837-2558
WWW.WARDEDWARDS.COM

WESTIN HOTEL PAVILION EXPANSION
TOWN OF HILTON HEAD ISLAND, SOUTH CAROLINA

WESTIN HILTON HEAD ISLAND RESORT AND SPA
TOWN OF HILTON HEAD ISLAND, SOUTH CAROLINA

CONSTRUCTION DETAILS

☒ NOT FOR CONSTRUCTION
☐ RELEASED FOR CONSTRUCTION

PROJECT #:	150243
DATE:	09/06/16
DESIGNED BY:	ELH
CHECKED BY:	GAB
SCALE:	AS NOTED

SHEET
C603

THIS DOCUMENT AND ALL REPRODUCIBLE COPIES OF THIS DOCUMENT ARE THE PROPERTY OF WARD EDWARDS, INC. REPRODUCTION OR ALTERATIONS OF THIS DRAWING WITHOUT THE WRITTEN CONSENT OF WARD EDWARDS, INC. IS NOT PERMITTED.

O:\Data\Projects\150243 - Westin Expansion HHI\CAD Design Files\150243-Master.dwg, 9/13/2016 12:25:08 PM, 1:1

IF THIS SHEET IS LESS THAN 22" X 34" IT IS A REDUCED PRINT, SCALE ACCORDINGLY

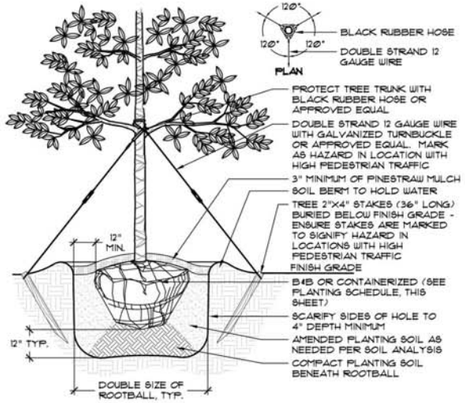

NOTES:

1. TREE STAKING OPTIONAL, HOWEVER, LANDSCAPE CONTRACTOR RESPONSIBLE FOR MAINTAINING TREES IN AN UPRIGHT (90 DEGREE/ PERPENDICULAR) POSITION FOR 1 YEAR AFTER PLANTING IS COMPLETE OR UNTIL TREE ROOT SYSTEM IS FULLY ESTABLISHED AND STURDY. FINAL TREE STAKING DETAILS AND PLACEMENT TO BE APPROVED BY OWNER'S REPRESENTATIVE.
2. CONTRACTOR SHALL ASSURE PERCOLATION OF ALL PLANTING PITS PRIOR TO INSTALLATION.
3. IN SEMI-IMPERVIOUS SOIL CONDITIONS, ROOTBALL ELEVATION SHALL BE 2" ABOVE FINISH GRADE. COORDINATE WITH OWNER'S REPRESENTATIVE PRIOR TO SETTING ROOTBALL ELEVATIONS.

1 L500 TREE PLANTING
SCALE: N.T.S.

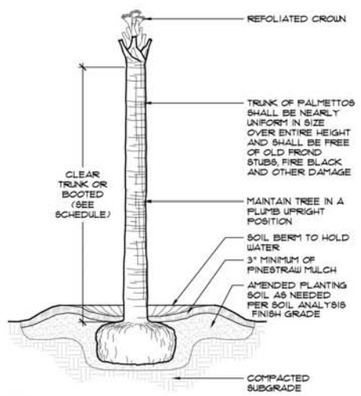

NOTES:

1. FINAL TREE STAKING DETAILS AND PLACEMENT TO BE APPROVED BY OWNER OR OWNER'S REPRESENTATIVE.
2. CONTRACTOR SHALL ASSURE PERCOLATION OF ALL PLANTING PITS PRIOR TO INSTALLATION.
3. SABAL PALMETTOS SHALL BE REFOLIATED.

2 L500 PALM TREE PLANTING
SCALE: N.T.S.

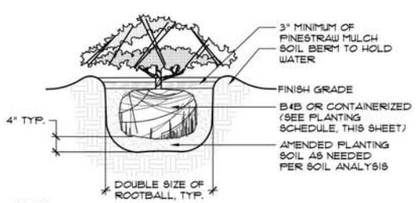

NOTES:

1. WHEN GROUNDCOVERS AND SHRUBS ARE USED IS MASSES, ENTIRE BED TO BE EXCAVATED TO RECEIVE PLANTING SOIL AND PLANT MATERIAL.
2. CONTRACTOR SHALL ASSURE PERCOLATION OF ALL PLANTING PITS PRIOR TO INSTALLATION.
3. IN SEMI-IMPERVIOUS SOIL CONDITIONS, ROOTBALL ELEVATION SHALL BE 12" ABOVE FINISH GRADE. COORDINATE WITH OWNER'S REPRESENTATIVE PRIOR TO SETTING ROOTBALL ELEVATIONS.

3 L500 SHRUB PLANTING
SCALE: N.T.S.

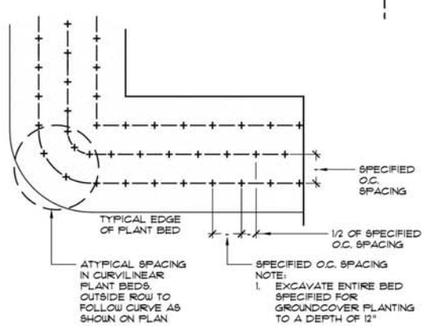

4 L500 GROUND COVER PLANTING
SCALE: N.T.S.

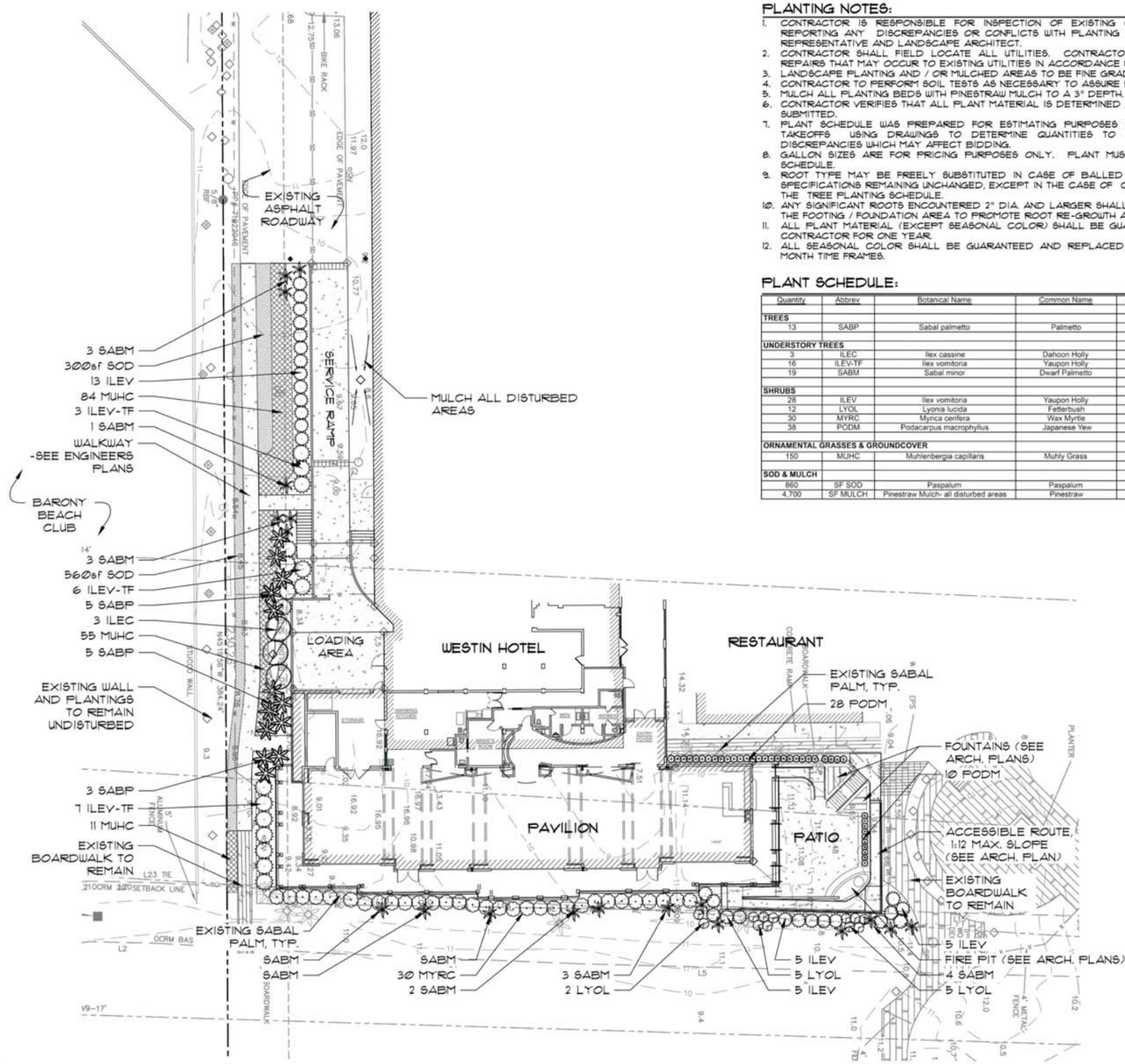

PLANTING NOTES:

1. CONTRACTOR IS RESPONSIBLE FOR INSPECTION OF EXISTING CONDITIONS, INCLUDING UTILITIES, AND PROMPTLY REPORTING ANY DISCREPANCIES OR CONFLICTS WITH PLANTING AREAS. REPORT INFORMATION TO OWNER, OWNER'S REPRESENTATIVE AND LANDSCAPE ARCHITECT.
2. CONTRACTOR SHALL FIELD LOCATE ALL UTILITIES. CONTRACTOR IS RESPONSIBLE FOR ANY DAMAGE AND MAKE REPAIRS THAT MAY OCCUR TO EXISTING UTILITIES IN ACCORDANCE WITH NATIONAL, STATE AND LOCAL CODES.
3. LANDSCAPE PLANTING AND / OR MULCHED AREAS TO BE FINE GRADED, HAND RAKED SMOOTH AND FREE OF DEBRIS.
4. CONTRACTOR TO PERFORM SOIL TESTS AS NECESSARY TO ASSURE PLANT HEALTH AND GROWTH.
5. MULCH ALL PLANTING BEDS WITH PINESTRAW MULCH TO A 3" DEPTH.
6. CONTRACTOR VERIFIES THAT ALL PLANT MATERIAL IS DETERMINED AVAILABLE AS SPECIFIED WHEN BID / PROPOSAL IS SUBMITTED.
7. PLANT SCHEDULE WAS PREPARED FOR ESTIMATING PURPOSES ONLY. CONTRACTOR SHALL MAKE OWN QUANTITY TAKEOFFS USING DRAWINGS TO DETERMINE QUANTITIES TO HIS SATISFACTION, REPORTING PROMPTLY ANY DISCREPANCIES WHICH MAY AFFECT BIDDING.
8. GALLON SIZES ARE FOR PRICING PURPOSES ONLY. PLANT MUST MEET HEIGHTS AND WIDTHS SPECIFIED IN PLANT SCHEDULE.
9. ROOT TYPE MAY BE FREELY SUBSTITUTED IN CASE OF BALLED AND BURLAPPED OR CONTAINER GROWN, OTHER SPECIFICATIONS REMAINING UNCHANGED, EXCEPT IN THE CASE OF CONTAINER GROWN SPECIMEN TREES AS INDICATED IN THE TREE PLANTING SCHEDULE.
10. ANY SIGNIFICANT ROOTS ENCOUNTERED 2" DIA. AND LARGER SHALL BE DUG OUT BY HAND AND CLEANLY CUT BACK IN THE FOOTING / FOUNDATION AREA TO PROMOTE ROOT RE-GROWTH AND HELP PREVENT ROOT DIEBACK.
11. ALL PLANT MATERIAL (EXCEPT SEASONAL COLOR) SHALL BE GUARANTEED AND REPLACED AS NECESSARY BY THE CONTRACTOR FOR ONE YEAR.
12. ALL SEASONAL COLOR SHALL BE GUARANTEED AND REPLACED AS NECESSARY BY THE CONTRACTOR FOR THREE MONTH TIME FRAMES.

PLANT SCHEDULE:

Quantity	Abbrev	Botanical Name	Common Name	Height	Spread	Container	Cal/Spacing	Notes
TREES								
13	SABP	Sabal palmetto	Palmetto	16'-20'	-	Booted	-	
UNDERSTORY TREES								
9	ILEC	Ilex cassine	Dahoon Holly	12-14'	5-6'	90 gal.	-	Full to ground
16	ILEV-TF	Ilex vomitoria	Yaupon Holly	7-8'	4-5'	45 gal.	-	Tree form
19	SABM	Sabal minor	Dwarf Palmetto	4'-6'	4'-5'	45 gal.	-	Full
SHRUBS								
28	ILEV	Ilex vomitoria	Yaupon Holly	4-5'	3'-4'	30 gal.	-	Full
12	LYOL	Lyonia lucida	Fetterbush	24-36"	18"-24"	15 gal.	-	Full
30	MYRC	Myrica cerifera	Wax Myrtle	4-5'	3-4'	15 gal.	-	Full
38	PODM	Podacrpus macrophyllus	Japanese Yew	3-4'	18-24"	15 gal.	-	Full
ORNAMENTAL GRASSES & GROUNDCOVER								
150	MUHC	Muhlenbergia capillaris	Muhly Grass	18"-24"	18"-24"	3 gal.	30" O.C.	Full
SOD & MULCH								
860	SF SOD	Paspalum	Paspalum	-	-	-	-	-
4,700	SF MULCH	Pinestraw Mulch- all disturbed areas	Pinestraw	-	-	-	-	-

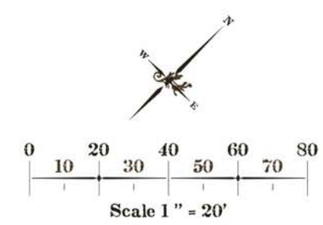

Wimer, Jones, Keefer Ltd.
landscape architecture
land planning
www.wjkltd.com
14 Palmetto Way, Suite A • Bluffton, South Carolina • 29910 • ph 843.757.7411

LANDSCAPE DEVELOPMENT PLANS
FOR
WESTIN HOTEL PAVILION REDEVELOPMENT
HILTON HEAD ISLAND, SOUTH CAROLINA

DRAWING TITLE
PLANTING PLAN

FINAL

DATE:	09-13-16
PROJECT NO.:	1610.01
DRAWN BY:	JC
CHECKED BY:	DK

REVISIONS:

DRAWING NUMBER
L500

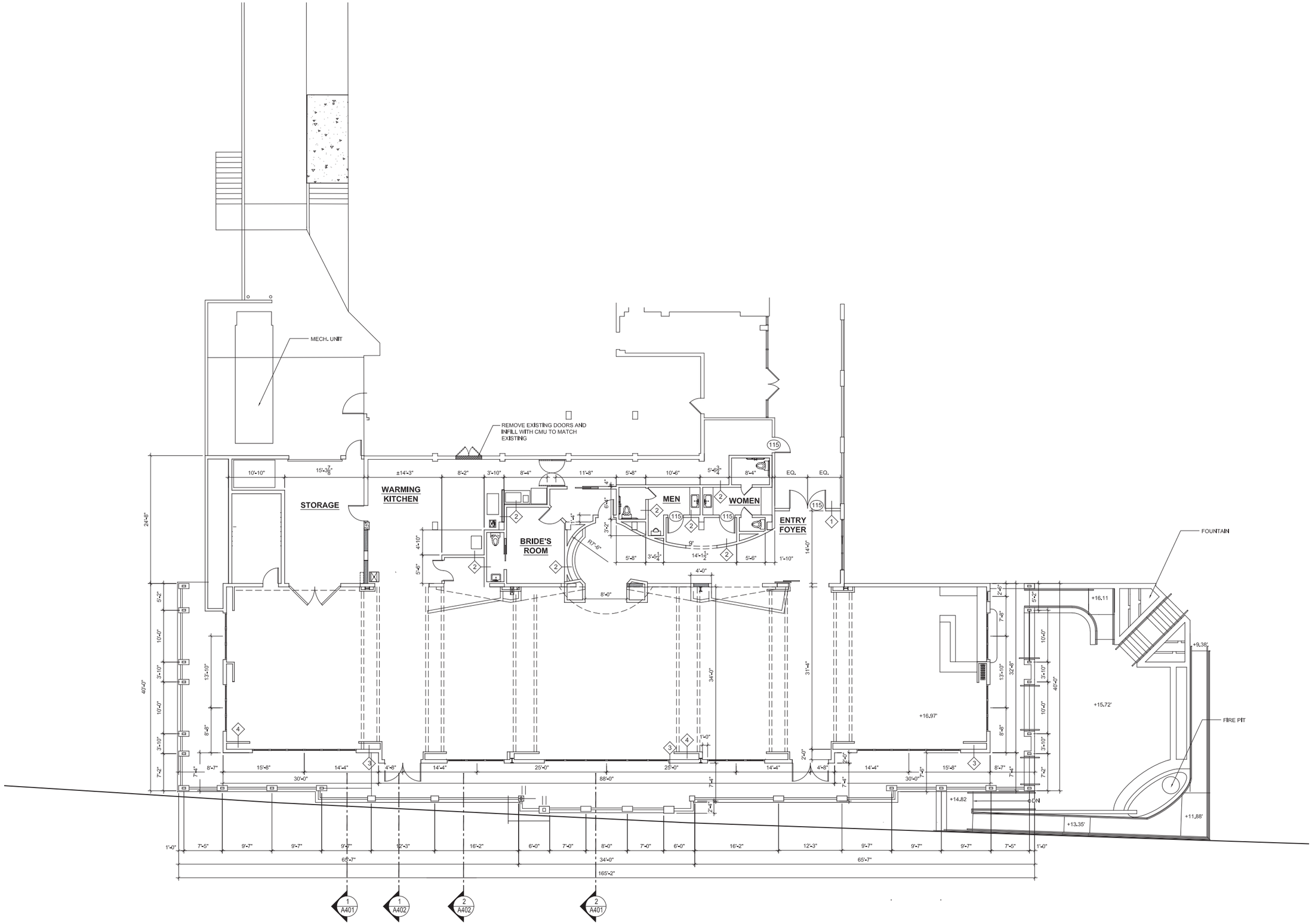

SKLAR
Design Ecotecture
sklarecodesign@gmail.com
843.368.1284
Sklar Design Ecotecture, LLC
71 Kensington Blvd. Bluffton, SC, 29910

T. MICHAELS - ARCHITECT
PORT ROYAL, SC
843.252.2454
TM ARCHITECT

copyright notice

This drawing is an instrument of service and remains the property of the Designer / Author. It is not to be used for any work other thanthat for which it is drawn without liability. The drawings and specifications shall not be shown, used or disclosed to any person, firm, corporation or entity for any other project or addition to this project except by agreement in writing and appropriate compensation to SKLAR Design & Ecotecture LLC. All sets are to be returned to this office at the completion of the work.

Copyright 2015

PROJECT

WESTIN PAVILION REDEVELOPMENT

2 GRASSLAWN AVE.
HILTON HEAD ISLAND
SOUTH CAROLINA

CLIENT

SCG HILTON HEAD PROPERTY LLC

Issue / revisions	
1	
2	
3	
4	
5	
6	
07-26-16	FINAL DESIGN REVIEW
15047	---
drawn by: TAM	checked by: TAM

PLAN

A201

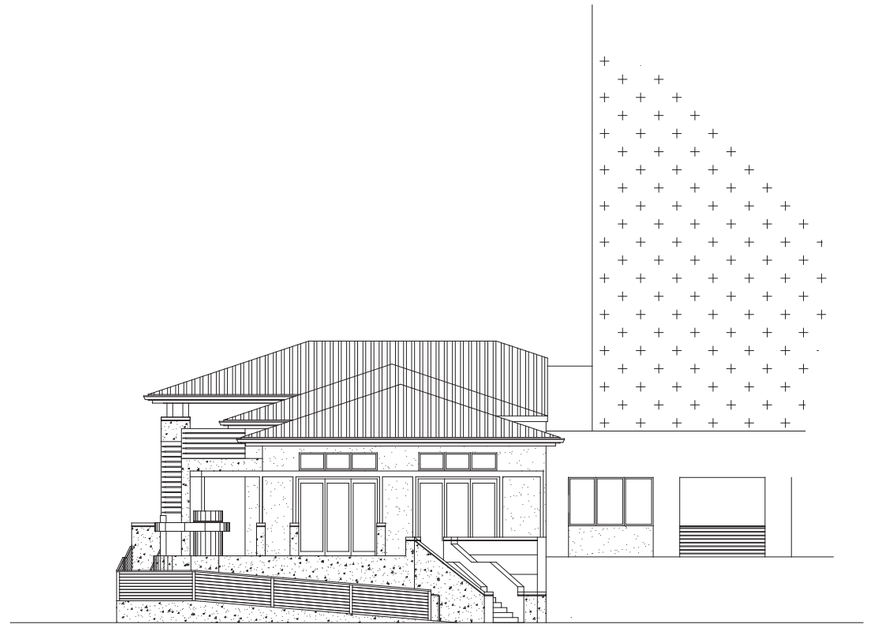

2 A301 EAST ELEVATION
SCALE: 1/8" = 1'-0"

1 A301 SOUTH ELEVATION
SCALE: 1/8" = 1'-0"

SKLAR Design Ecotecture
sklarecodesign@gmail.com
843.368.1284
Sklar Design Ecotecture, LLC
71 Kensington Blvd. Bluffton, SC. 29910

T. MICHAELS - ARCHITECT
PORT ROYAL, SC
843.252.2454

copyright notice

This drawing is an instrument of service and remains the property of the Designer / Author. It is not to be used for any work other thanthat for which it is drawn without liability. The drawings and specifications shall not be shown, used or disclosed to any person, firm, corporation or entity for any other project or addition to this project except by agreement in writing and appropriate compensation to SKLAR Design & Ecotecture LLC. All sets are to be returned to this office at the completion of the work.

Copyright 2015

PROJECT

WESTIN PAVILION REDEVELOPMENT

2 GRASSLAWN AVE.
HILTON HEAD ISLAND
SOUTH CAROLINA

CLIENT

SCG HILTON HEAD PROPERTY LLC

Issue / revisions	
1	
2	
3	
4	
5	
6	
07-26-16	FINAL DESIGN REVIEW
15047	
drawn by: TAM	checked by: TAM

ELEVATIONS

A301

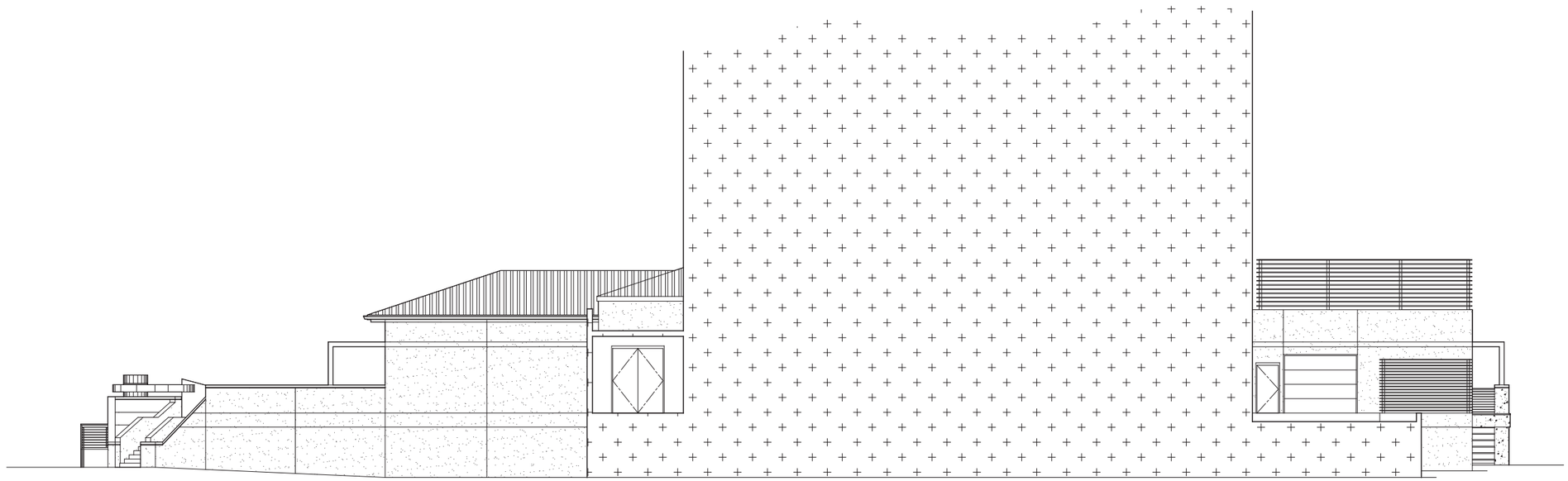

2 A302 NORTH ELEVATION
SCALE: 1/8" = 1'-0"

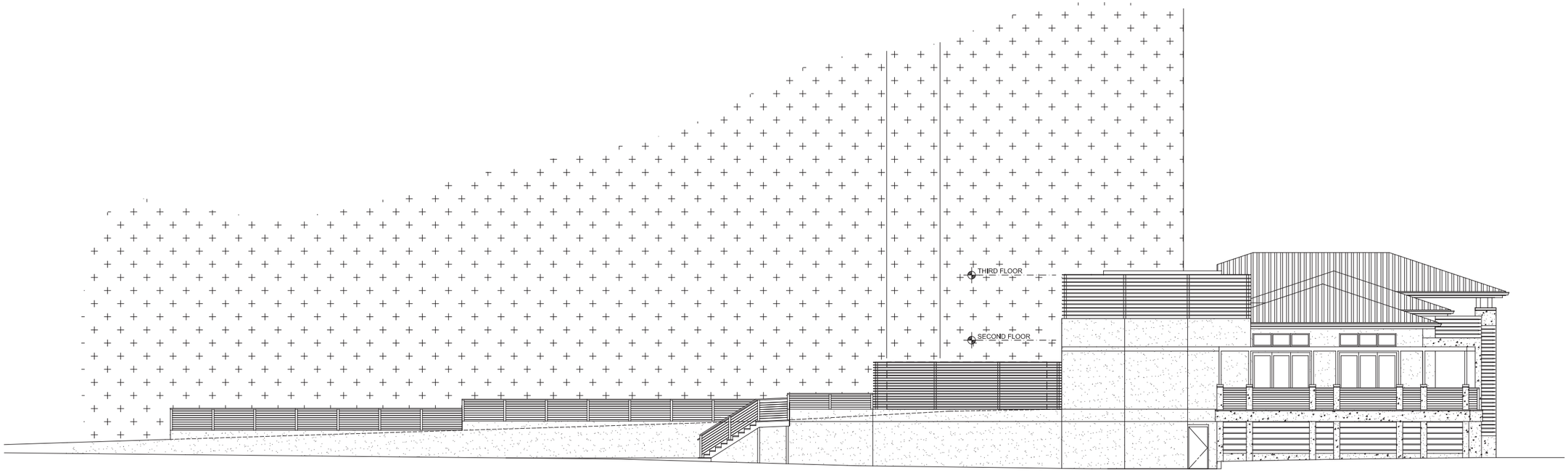

1 A302 WEST ELEVATION
SCALE: 1/8" = 1'-0"

SKLAR
Design Ecotecture
sklarecodesign@gmail.com
843.368.1284
Sklar Design Ecotecture, LLC
71 Kensington Blvd. Bluffton, SC, 29910

T. MICHAELS - ARCHITECT
PORT ROYAL, SC
843.252.2454
TMA ARCHITECT

copyright notice
This drawing is an instrument of service and remains the property of the Designer / Author. It is not to be used for any work other thanthat for which it is drawn without liability. The drawings and specifications shall not be shown, used or disclosed to any person, firm, corporation or entity for any other project or addition to this project except by agreement in writing and appropriate compensation to SKLAR Design & Ecotecture LLC. All sets are to be returned to this office at the completion of the work.

Copyright 2015

PROJECT

WESTIN PAVILION REDEVELOPMENT

2 GRASSLAWN AVE.
HILTON HEAD ISLAND
SOUTH CAROLINA

CLIENT

SCG HILTON HEAD PROPERTY LLC

Issue / revisions	
1	
2	
3	
4	
5	
6	
07-26-16	FINAL DESIGN REVIEW
15047	
drawn by: TAM	checked by: TAM

ELEVATIONS

A302

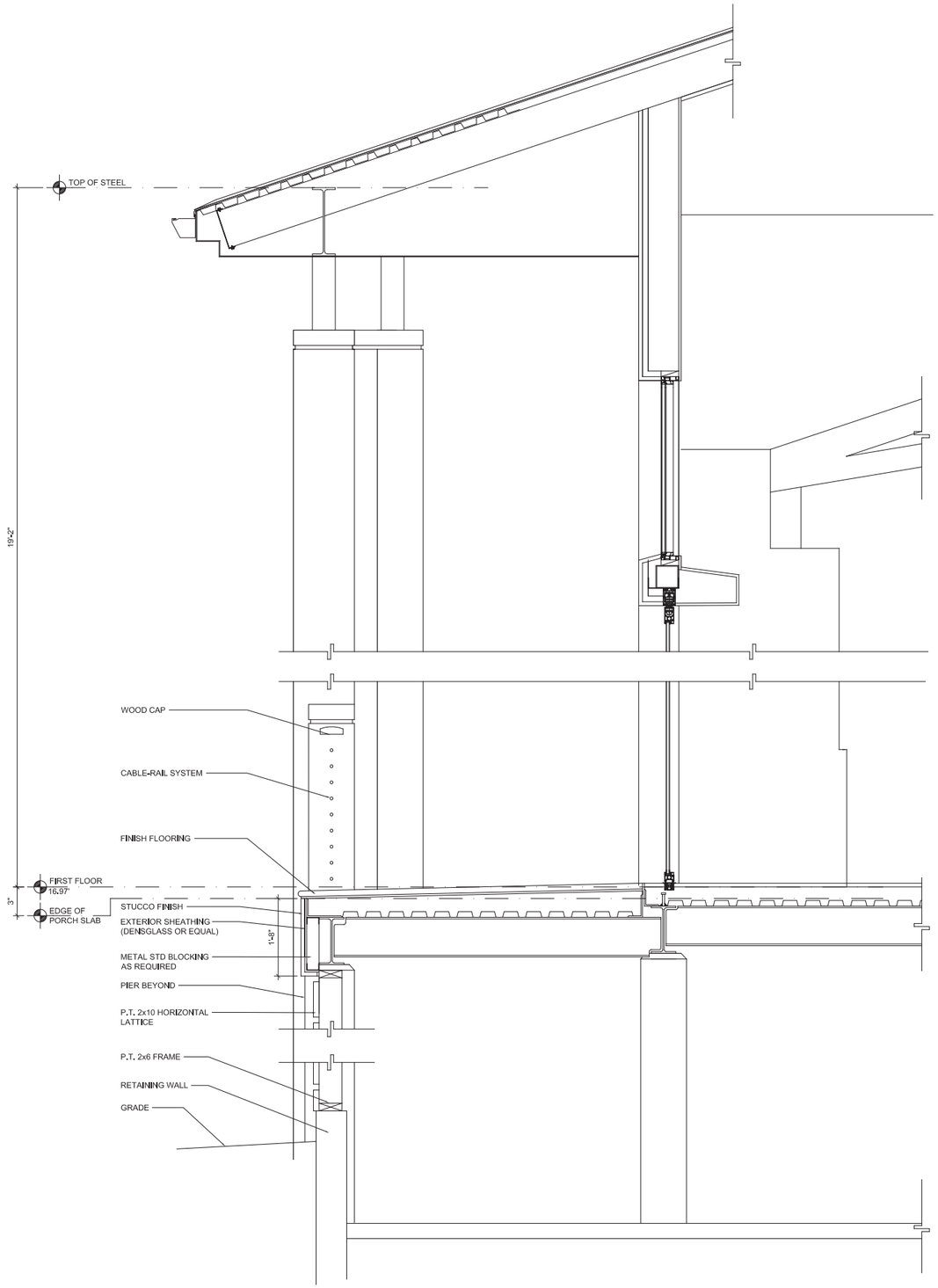

2 A401 SECTION
SCALE: 3/4" = 1'-0"

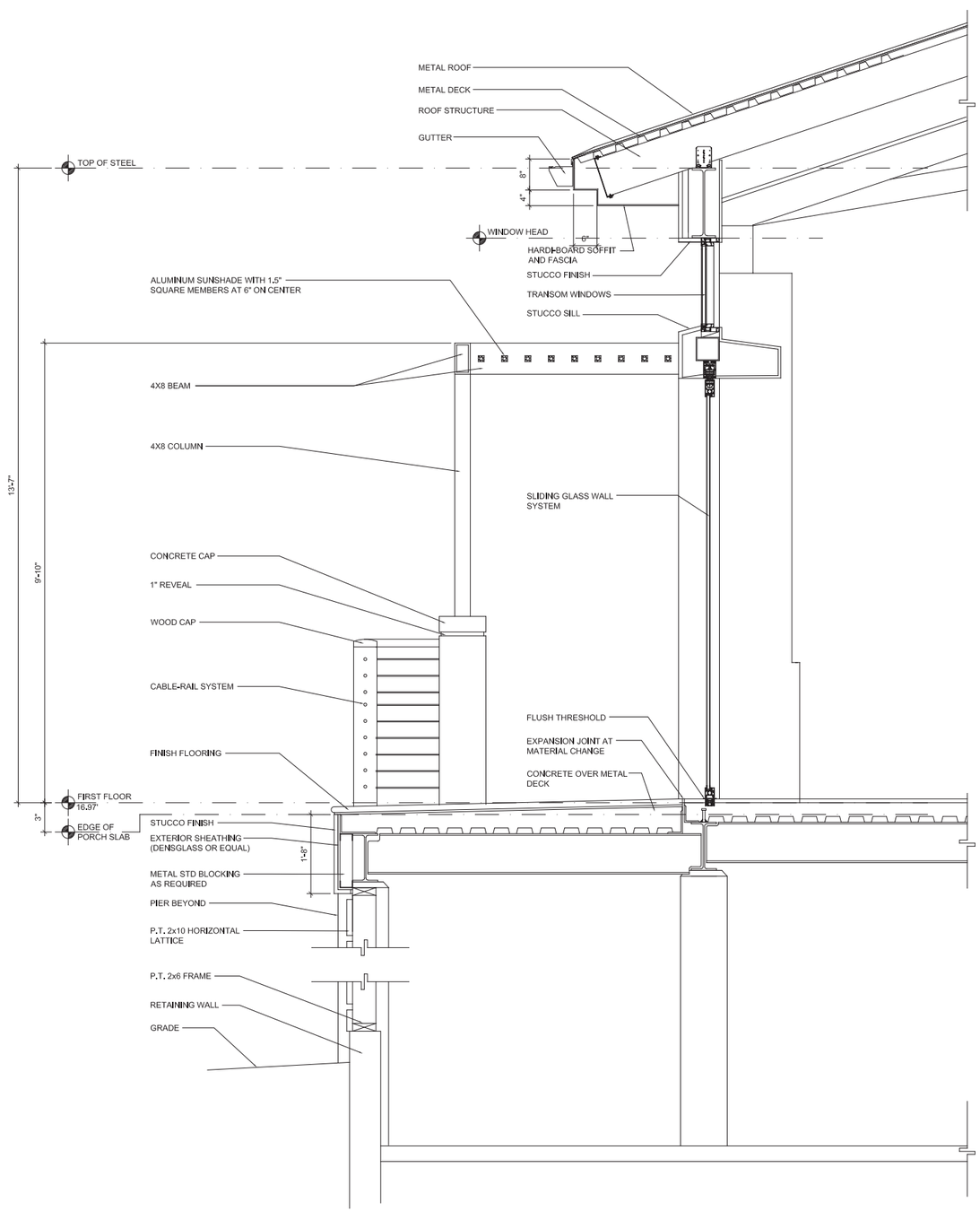

1 A401 SECTION
SCALE: 3/4" = 1'-0"

SKLAR
Design Ecotecture
sklarecodesign@gmail.com
843.368.1281
Sklar Design Ecotecture, LLC
71 Kensinton Blvd, Bluffton, SC, 29910

T. MICHAELS - ARCHITECT
PORT ROYAL, SC
843.252.2454
TAM ARCHITECT

copyright notice
This drawing is an instrument of service and remains the property of the Designer / Author. It is not to be used for any work other thanthat for which it is drawn without liability. The drawings and specifications shallnot be shown, used or disclosed to any person, firm, corporation or entity for any other project or addition to this project except by agreement in writing and appropriate compensation to SKLAR Design & Ecotecture LLC. All sets are to be returned to this office at the completion of the work.
Copyright 2015

PROJECT
WESTIN PAVILION REDEVELOPMENT
2 GRASSLAWN AVE.
HILTON HEAD ISLAND
SOUTH CAROLINA

CLIENT
SCG HILTON HEAD PROPERTY LLC

Issue / revisions	
1	
2	
3	
4	
5	
6	
07-26-16	FINAL DESIGN REVIEW
15047	DRAW.
drawn by TAM	checked by TAM

DETAILS

A401

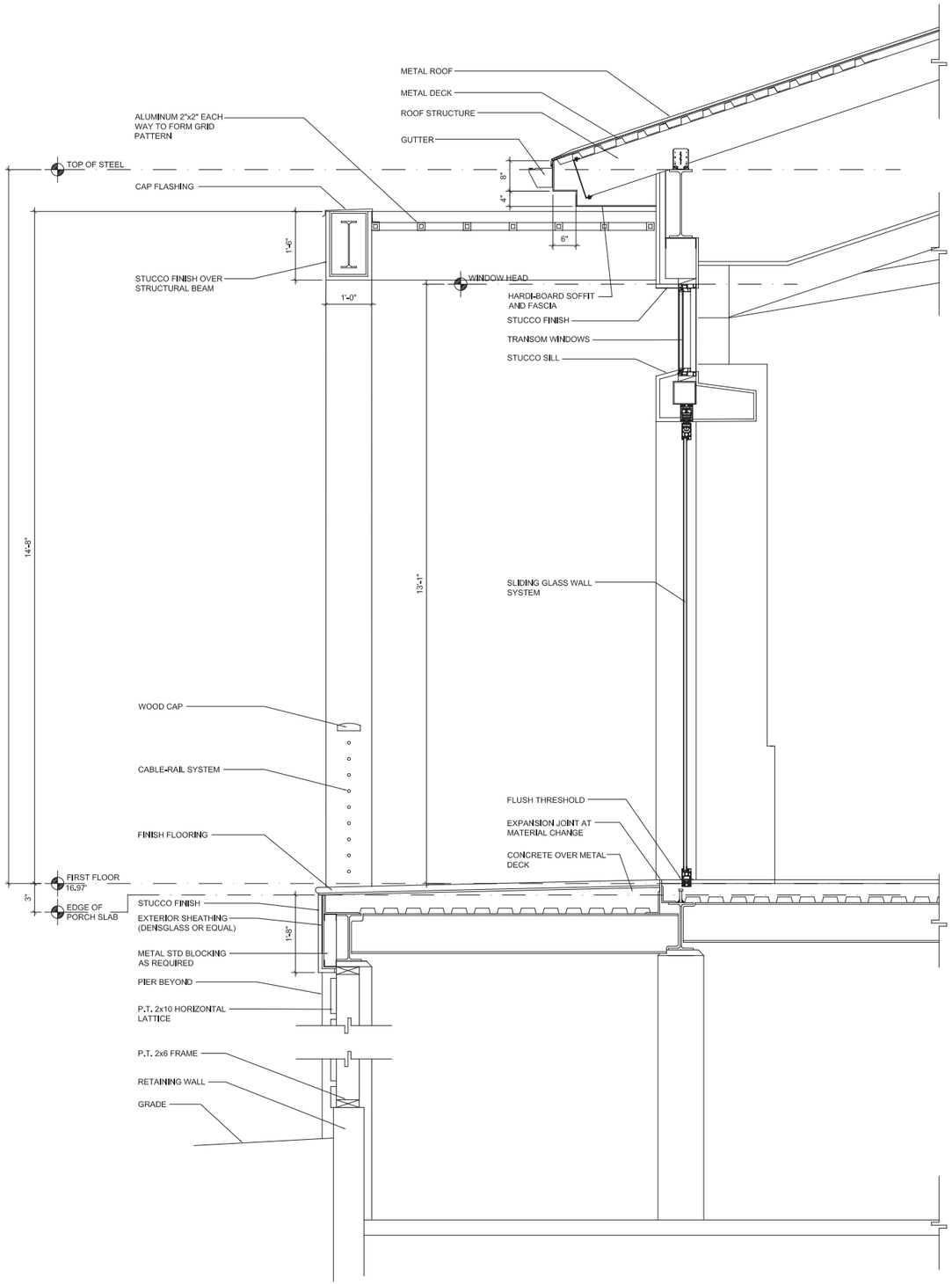

2 A402 SECTION
SCALE: 3/4" = 1'-0"

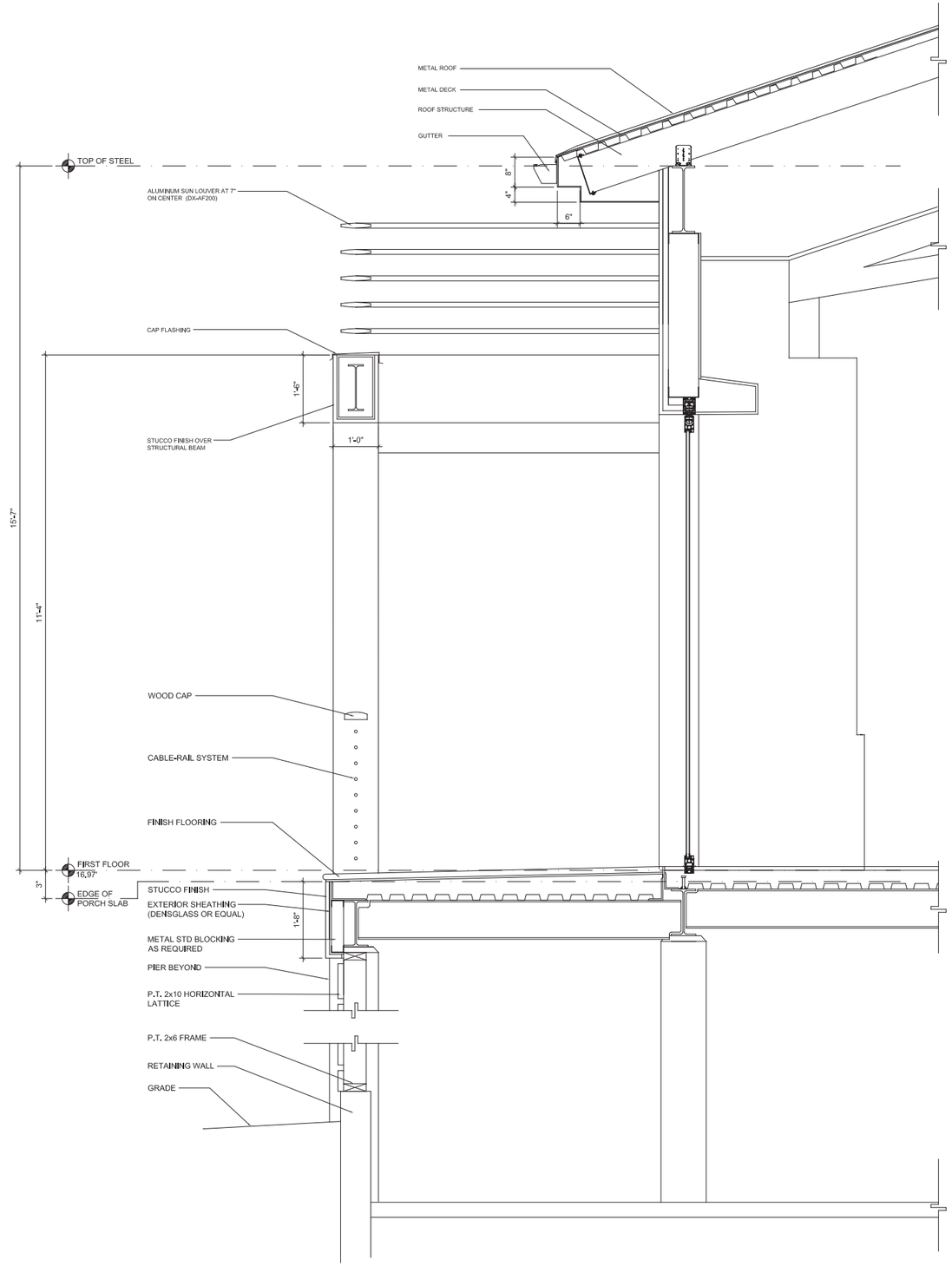

1 A402 SECTION
SCALE: 3/4" = 1'-0"

SKLAR Design Ecotecture
sklarecodesign@gmail.com
843.368.1281
Sklar Design Ecotecture, LLC
71 Kensinton Blvd, Bluffton, SC, 29910

T. MICHAELS - ARCHITECT
PORT ROYAL, SC
843.252.2454

copyright notice
This drawing is an instrument of service and remains the property of the Designer / Author. It is not to be used for any work other thanthat for which it is drawn without liability. The drawings and specifications shallnot be shown, used or disclosed to any person, firm, corporation or entity for any other project or addition to this project except by agreement in writing and appropriate compensation to SKLAR Design & Ecotecture LLC. All sets are to be returned to this office at the completion of the work.
Copyright 2015

PROJECT

WESTIN PAVILION REDEVELOPMENT

2 GRASSLAWN AVE.
HILTON HEAD ISLAND
SOUTH CAROLINA

CLIENT

SCG HILTON HEAD PROPERTY LLC

Issue / revisions	
1	
2	
3	
4	
5	
6	
07-26-16	FINAL DESIGN REVIEW
15047	
drawn by TAM	checked by TAM

DETAILS

A402

NOTES - STRUCTURAL

A. DESIGN CRITERIA

1. REFERENCE CODE

   2015 INTERNATIONAL BUILDING CODE WITH SOUTH CAROLINA STATE AMENDMENTS

2. MINIMUM DESIGN LOADS FOR BUILDINGS AND OTHER STRUCTURES DURING CONSTRUCTION ARE REQUIRED PER ASCE STANDARD NO.37-02 "DESIGN LOADS ON STRUCTURES DURING CONSTRUCTION"

3. BUILDING DESIGN LOADS

   LIVE LOAD INFORMATION

   A. ROOF LIVE LOAD (REDUCED FOR TRIBUTARY AREA) = 20 PSF
   B. FLOOR LIVE LOAD = 100 PSF HOTEL, PUBLIC ROOMS
   (EXPECT 15% REDUCTION AT SOME PIERS)

   ROOF DEAD LOAD INFORMATION

   A.15.0 PSF FOR SLOPED ROOFING SYSTEM (NOT INCLUDING WEIGHT OF BEAMS)
   B. 20.0 PSF FOR FLAT ROOFING SYSTEM (NOT INCLUDING WEIGHT OF BEAMS)
   C. 5.0 PSF COLLATERAL LOAD (LIGHTS, HVAC, SPRINKLERS, ETC.)
   D. SEE FRAMING PLAN FOR OTHER CONCENTRATED LOADS

   FLOOR DEAD LOAD INFORMATION

   A. 90.0 PSF AT THICK TILE AREAS (UNDER TRELLIS)
   B. 50.0 PSF AT THIN TILE AREAS (MAIN AREA)

   WIND LOAD INFORMATION

   A. DESIGN WIND SPEED = 142 MPH
   B. WIND IMPORTANCE FACTOR (I_W) = 1.0
   C. RISK CATEGORY = II
   D. WIND EXPOSURE = D
   E. INTERNAL PRESSURE COEFFICIENT = +/- 0.18
   F. COMPONENTS AND CLADDING = AS FOLLOWS

   WIND PRESSURES (NET)

   ROOF
   ZONE 1: -27 PSF
   ZONE 2: -50 PSF
   ZONE 3: -77 PSF
   WALLS
   ZONE 4 -39 PSF
   ZONE 5 -48 PSF
   WIND PRESSURES ARE REPORTED AT ASD LEVEL

SEISMIC DESIGN INFORMATION

A. SEISMIC IMPORTANCE FACTOR (I_e) = 1.5
B. SEISMIC DESIGN CATEGORY = C
C. 0.2 SECOND SPECTRAL RESPONSE ACCELERATION (S_S) = 0.428
D. 1 SECOND SPECTRAL RESPONSE ACCELERATION (S_I) = 0.151
E. 0.2 DESIGN SPECTRAL RESPONSE ACCELERATION (S_{DS}) = 0.416
F. 1 SECOND DESIGN SPECTRAL RESPONSE ACCELERATION (S_{D1}) = 0.221
G. SITE CLASS = C
H. RESPONSE MODIFICATION COEFFICIENT (R) = 3.5 ORDINARY MOMENT FRAME
= 4 ORDINARY CONCRETE SHEARWALL (FOUNDATION)
= 4 LIGHT GAUGE STEEL WITH FLAT STRAPS
I. SEISMIC RESPONSE COEFFICIENT (C_S) = 0.112
J. DESIGN BASE SHEAR (V_C) = 135 KIPS
K. ANALYTICAL PROCEDURE = EQUIVALENT LATERAL FORCE PROCEDURE

B. GENERAL

1. THE INTENT OF THESE DRAWINGS IS TO SHOW ALL ITEMS NECESSARY TO COMPLETE THE STRUCTURE, FOR ITEMS, METHODS AND/OR MATERIALS NOT SHOWN, THE MINIMUM REQUIREMENTS OF THE REFERENCE CODE SHALL GOVERN, ALL WORK AND CONSTRUCTION SHALL COMPLY WITH ALL OTHER APPLICABLE BUILDING CODES, SOIL REPORTS, REGULATIONS AND SAFETY REQUIREMENTS.

2. IT SHALL BE THE CONTRACTOR SOLE RESPONSIBILITY TO DESIGN AND PROVIDE ADEQUATE SHORING, BRACING AND FORMWORK, ETC. AS REQUIRED FOR THE PROTECTION OF LIFE AND PROPERTY DURING THE CONSTRUCTION OF THE BUILDING. SHORING AND TEMPORARY BRACING SHALL REMAIN IN PLACE UNTIL FLOORS, ROOF AND LATERAL BRACING SYSTEMS HAVE BEEN ENTIRELY CONSTRUCTED OR UNTIL THE PARTIALLY BUILT STRUCTURE IS PROVEN SAFE AND STABLE BY A REGISTERED STRUCTURAL ENGINEER ENGAGED BY THE CONTRACTOR. SHORING DRAWINGS AND CALCULATIONS SHALL BE SEALED BY A REGISTERED ENGINEER AND SUBMITTED TO ARCHITECT/ENGINEER FOR REVIEW. MINIMUM DESIGN LOADS FOR BUILDINGS AND OTHER STRUCTURES DURING CONSTRUCTION SHALL BE MAINTAINED PER ASCE STANDARD NO. 37-02 " DESIGN LOADS ON STRUCTURES DURING CONSTRUCTION" .

3. THE CONTRACTOR SHALL CHECK AND VERIFY ALL DIMENSIONS WITH THE ARCHITECTURAL, ELECTRICAL, AND MECHANICAL DRAWINGS BEFORE PREPARING SHOP DRAWINGS, FABRICATION OR CONSTRUCTION. SEE ARCHITECTURAL, ELECTRICAL, AND MECHANICAL DRAWINGS FOR SIZE AND LOCATIONS OF PIPES, SLEEVES, PITS, VENTS, DUCTS, ROOF OPENINGS, TRENCHES, EQUIPMENT PADS, AND MISCELLANEOUS IRON, ETC. AND DETAILS NOT SHOWN ON THE STRUCTURAL DRAWINGS.

4. CONSTRUCTION MATERIALS SHALL BE SPREAD OUT IF PLACED ON FRAMED ROOF OR FLOOR. THE LOAD SHALL NOT EXCEED THE DESIGN LIVE LOAD PER SQUARE FOOT. PROVIDE ADEQUATE SHORING AND/OR BRACING WHERE STRUCTURE HAS NOT ATTAINED DESIGN STRENGTH.

5. ALL DRAWINGS ARE CONSIDERED TO BE A PART OF THE CONTRACT DOCUMENTS. THE CONTRACTOR SHALL BE RESPONSIBLE FOR THE REVIEW AND COORDINATION OF ALL DRAWINGS AND SPECIFICATIONS PRIOR TO THE START OF CONSTRUCTION. ANY DISCREPANCIES THAT OCCUR SHALL BE BROUGHT TO THE ATTENTION OF THE ARCHITECT PRIOR TO STAT OF CONSTRUCTION SO THAT A CLARIFICATION CAN BE ISSUED. ANY WORK PERFORMED IN CONFLICT WITH THE CONTRACT DOCUMENT OR ANY CODE REQUIREMENTS SHALL BE CORRECTED BY THE CONTRACTOR AT THEIR OWN EXPENSE AND AT NO EXPENSE TO THE OWNER OR ARCHITECT.

6. NOTES AND DETAILS ON DRAWINGS SHALL TAKE PRECEDENCE OVER GENERAL NOTES AND TYPICAL DETAILS. WHERE NO DETAIL IS GIVEN, CONSTRUCTION SHALL BE AS SHOWN FOR SIMILAR WORK.

7. OPENINGS, POCKETS, ETC. LARGER THAN 6" SHALL NOT BE PLACED IN CONCRETE SLABS, DECKS, WALLS, UNLESS SPECIALLY DETAILED ON THE STRUCTURAL DRAWINGS. NOTIFY THE STRUCTURAL ENGINEER WHEN DRAWINGS BY OTHERS SHOW OPENINGS. POCKETS, ETC. LARGER THAN 6" NOT SHOWN ON THE STRUCTURAL DRAWINGS, BUT WHICH ARE LOCATED IN STRUCTURAL MEMBERS. FOR ANY FURTHER RESTRICTIONS ON OPENINGS IN STRUCTURAL ELEMENTS. SEE APPLICABLE SECTIONS BELOW.

8. PIPES LARGER THAN 1 1/2" DIAMETER SHALL NOT BE EMBEDDED IN STRUCTURAL CONCRETE WHEN WHERE SPECIFICALLY APPROVED

9. FRAMING FOR FLOOR AND ROOF OPENINGS SHALL BE PER THE TYPICAL DETAILS.

10. ALL CONTRACTOR-DESIGNED ELEMENTS SHALL BE DESIGNED BY A LICENSED PROFESSIONAL ENGINEER. CONTRACTOR SHALL SUBMIT CALCULATIONS CERTIFYING THAT ELEMENTS ARE DESIGNED FOR THE UNFACTORED LOADS STATED.

11. ALL TESTING AND INSPECTION OF WELDS SHALL BE DONE BY AN INDEPENDENT TESTING SERVICE ACCEPTABLE TO THE STRUCTURAL ENGINEER AND SHALL CONFORM TO THE LATEST EDITION OF ANSI/AWS 01.1. WELD INSPECTION TO BE AWS CERTIFIED.

12. SHOP DRAWINGS PREPARED BY SUPPLIERS AND SUBCONTRACTORS SHALL BE REVIEWED BY THE GENERAL CONTRACTOR PRIOR TO SUBMITTING TO THE STRUCTURAL ENGINEER.

13. CONTRACTOR SHALL PROVIDE SHOP DRAWINGS SHOWING SIZE, METHOD OF ANCHORAGE, AND WEIGHT OF ALL EQUIPMENT THAT IS TO BE SUPPORTED BY THE STRUCTURE FOR REVIEW BY THE STRUCTURAL ENGINEER TO DETERMINE ADEQUACY OF THE STRUCTURE, PRIOR TO ORDERING.

14. THE CONTRACTOR SHALL BE RESPONSIBLE FOR THE DESIGN AND DETAIL OF SIMPLE (SHEAR ONLY) CONNECTIONS NOT SHOWN ON DRAWINGS.

B. GENERAL (CONTD.)

15.SHOP DRAWINGS AND SUBMITTALS:

SUBMITTALS

AS A MINIMUM, SUBMIT THE FOLLOWING ITEMS FOR REVIEW BY THE ENGINEER.

CONCRETE MIX DESIGN(S)
REINFORCING STEEL SHOP DRAWINGS
CONCRETE FORM SHOP DRAWINGS
STRUCTURAL STEEL SHOP DRAWINGS
MILL TEST REPORTS FOR STRUCTURAL STEEL AND REBAR
MATERIAL CERTIFICATES FOR STRUCTURAL STEEL AND REBAR
WELDING CERTIFICATES
QUALIFICATION DATA FOR QUALIFIED INSTALLER, FABRICATOR, AND TESTING AGENCY
EMBEDDED ITEMS AND ACCESSORIES
STRUCTURAL PRODUCT DATA SUBMITTALS
FLOOR FLATNESS AND LEVELNESS MEASUREMENTS
STEEL STUD AND RAFTER SHOP DRAWINGS
OPEN WEB STEEL JOIST SHOP DRAWINGS
METAL DECK SHOP DRAWINGS
CONNECTION DESIGN & DRAWINGS

ADDITIONAL SUBMITTALS MAY BE REQUIRED IN THE STATEMENT OF SPECIAL INSPECTIONS AND SPECIFICATIONS

SHOP DRAWINGS AND OTHER ITEMS SHALL BE SUBMITTED TO THE ENGINEER FOR REVIEW PRIOR TO FABRICATION. ALL SHOP DRAWINGS SHALL BE REVIEWED BY THE GENERAL CONTRACTOR BEFORE SUBMITTAL. THE ENGINEER'S REVIEW IS INTENDED TO REVIEW THE CONFORMANCE WITH THE DESIGN CONCEPT AND GENERAL COMPLIANCE WITH THE RELEVANT CONTRACT DOCUMENTS. THE ENGINEER'S REVIEW DOES NOT RELIEVE THE CONTRACTOR OF THE SOLE RESPONSIBILITY TO REVIEW. CHECK AND COORDINATE THE SHOP DRAWINGS PRIOR TO SUBMISSION. THE CONTRACTOR REMAINS SOLELY RESPONSIBLE FOR ERRORS AND OMISSIONS ASSOCIATED WITH THE PREPARATION OF SHOP DRAWINGS AS THEY PERTAIN TO MEMBER SIZES, DETAILS, DIMENSIONS, ETC. REPRODUCTION OF CONTRACT DOCUMENTS SHALL NOT BE USED TO PREPARE SHOP DRAWINGS. SHOP DRAWINGS AND SUBMITTALS SHALL BE SUBMITTED "CONTRACTOR APPROVED".

SPECIAL INSPECTIONS

THIS PROJECT IS SUBJECT TO THE SPECIAL INSPECTIONS IN CHAPTER 17 OF THE INTERNATIONAL BUILDING CODE. THE REQUIREMENTS ARE DOCUMENTED IN THE STATEMENT OF SPECIAL INSPECTIONS THAT HAS BEEN PREPARED FOR THE PROJECT.

THE CONTRACTOR SHALL NOTIFY THE SPECIAL INSPECTOR AT LEAST 48 HOURS IN ADVANCE FOR WORK. THAT WILL REQUIRE INSPECTION FOR TESTING.

THE CONTRACTOR SHALL NOTIFY THE STRUCTURAL ENGINEER 48 HOURS PRIOR TO STEEL ERECTION, CONCRETE PLACEMENT, AND BACK FILL OPERATIONS.

STRUCTURAL DRAWING PACKAGE

SHEET INDEX

S1.00	STRUCTURAL NOTES
S1.01	STRUCTURAL NOTES
S1.02	STRUCTURAL NOTES
S1.03	STRUCTURAL NOTES
S2.00	PROPOSED FOUNDATION PLAN
S3.00	PROPOSED FIRST FLOOR FRAMING PLAN
S4.00	PROPOSED TRELLIS & CEILING FRAMING PLAN
S5.00	PROPOSED ROOF FRAMING PLAN
S6.01	SECTION DETAILS
S6.02	SECTION DETAILS
S6.03	SECTION DETAILS
S6.04	SECTION DETAILS
S6.05	SECTION DETAILS
S6.06	SECTION DETAILS
S6.07	SECTION DETAILS
S6.08	SECTION DETAILS
S6.09	SECTION DETAILS
S7.00	BUILDING SECTIONS

STRUCTURAL ABBREVIATIONS

A.B.	- ANCHOR BOLT
ADD/L	- ADDITIONAL
AFF	- ABOVE FINISHED FLOOR
ARCH	- ARCHITECT/ARCHITECTURAL
BFF	- BELOW FINISHED FLOOR
BM	- BM
BRG	- BRG
BSMNT	- BASEMENT
C.I.P.	- CAST IN PLACE
CA	- COLUMN ABOVE
CJ	- CONTROL JOINT
CL	- CENTER LINE
CLR	- CLEAR
CMU	- CONCRETE MASONRY UNIT
CONN	- CONNECTION
CONST JT	- CONSTRUCTION JOINT
COL.	- COLUMN
CONC	- CONCRETE
CONST	- CONSTRUCTION
CONT.	- CONTINUOUS
COORD.	- COORDINATE
DBA	- DEFORMED BAR ANCHOR
DET.	- DETAIL
DIAG	- DIAGONAL
DIA	- DIAMETER
DIM	- DIMENSION
DWG	- DRAWING
EA	- EACH
EF	- EACH FACE
EJ	- EXPANSION JOINT
EL	- ELEVATION
ENGR	- ENGINEER
EOD	- EDGE OF DECK
EOS	- EDGE OF SLAB
EQ	- EQUAL
EQUIP	- EQUIPMENT
EW	- EACH WAY
EXIST	- EXISTING
EXP	- EXPANSION
EXT	- EXTERIOR
F.F.	- FINISHED FLOOR
FFE	- FINISHED FLOOR ELEVATION
FIN.	- FINISH(ED)
FLR.	- FLOOR
FTG.	- FOOTING
GA	- GAUGE
GALV.	- GALVANIZE (D) (ING)
HI	- HIGH
HORIZ.	- HORIZONTAL
U.N.O.	- UNLESS NOTED OTHERWISE

STRUCTURAL SYMBOLS

NATIVE SOIL (EARTH)
COMPACTED SOIL (FINISH GRADE)
ROCK FILL
SAND / MORTAR / PLASTER
CONCRETE (CAST-IN-PLACE OR PRECAST)
STEEL CROSS SECTION
CONCRETE BLOCK (CMU)
LAMINATED WOOD DECK

COLUMN MARK
GRADE BEAM
T/GRD BM. X'-X'

INDICATES SPLICE W/ FULL PENETRATION WELL ALL AROUND

INDICATES SHEAR SPLICE BEAM CONNECTION

TOP OF XXXX
EL. X'-X"

INDICATES MOMENT CONNECTION
AT COLUMN AT BEAM

1 / S4.01 DETAIL SECTION TAG

1.0 COLUMN GRID

Strucutal Innovations, LLC
1011 Bay Street, Suite 306
Beaufort, South Carolina 29902
www.structuralinnovationsllc.com
ph. 843.441.9828 email:arichardson@structural.innovations llc.com

SOUTH CAROLINA STRUCTURAL INNOVATIONS, LLC No. 3686 CERTIFICATE OF AUTHORIZATION

No.	REVISIONS	BY	DATE

WESTIN HILTON HEAD ISLAND RESORT AND SPA EXPANSION
TOWN OF HILTON HEAD ISLAND, SC

STRUCTURAL NOTES

SOUTH CAROLINA REGISTERED PROFESSIONAL ENGINEER No. 22824 PHILIP ANDREW RICHARDSON

DATE	09/12/16
SCALE	AS SHOWN
PROJECT NO	16-0**

Sheet No.
S1.00

NOTES - STRUCTURAL

C. FOUNDATION

1. FOUNDATION DESIGN IS BASED ON A GEOTECHNICAL REPORT

2. ALL CONSTRUCTION SHALL COMPLY WITH THE RECOMMENDATIONS OF THE SOILS REPORT. THE STRUCTURAL ENGINEER IS NOT RESPONSIBLE FOR ANY GEOTECHNICAL ASPECTS OF THE PROJECT.

3. IT IS RECOMMENDED THAT SOIL ENGINEERS
   a) REVIEW THE FOUNDATION PLANS PRIOR TO CONSTRUCTION, AND
   b) OBSERVE THE INSTALLATION OF THE FOUNDATION.

4. ANY SLOPED SHALL BE CONSTRUCTED AT A MAXIMUM GRADIENT OF 2:1 (HORIZONTAL TO VERTICAL). FILL AND CUT SLOPES SHOULD BE VEGETATED AS SOON AS POSSIBLE TO MINIMIZE EROSION OF SOIL. SEE GEOTECHNICAL REPORT FOR ADDITIONAL INFORMATION.

5. ANY VERTICAL SOIL CUTS MUST BE PROVIDED WITH PROPER SHORING TO PROTECT THE WORKERS AND ADJACENT PROPERTY, THE CONTRACTOR SHALL BE SOLELY RESPONSIBLE FOR ALL EXCAVATION PROCEDURES INCLUDING LAGGING,SHORING, AND THE PROTECTION OF ADJACENT PROPERTY. STRUCTURES, STREETS AND UTILITIES, ALL WORK AND CONSTRUCTION SHALL COMPLY WITH ALL APPLICABLE BUILDING CODES, OSHA REGULATIONS AND SAFETY REQUIREMENTS.

6. AN ADEQUATE DRAINAGE SYSTEM SHALL BE PROVIDED TO COLLECT AND TRANSPORT RUNOFF WATER TO DISCHARGE FACILITIES. ALL RETAINING WALLS SHALL HAVE AT THE BOTTOM, PERFORATED BACK-OF-WALL DRAINS AND WEEP HOLES AT 6'-0" O.C. MAXIMUM.

7. ALL BUILDINGS PADS SHALL BE CONSTRUCTED IN ACCORDANCE WITH GEOTECHNICAL REPORT REFERRED TO IN NOTE #1 ABOVE.

8. COMPACTION OF OVER EXCAVATION & FILL MATERIAL SHALL BE IN ACCORDANCE WITH THE GEOTECHNICAL REPORT REFERRED TO IN NOTE #1 ABOVE.

9. ALL FOOTINGS SHALL BEAR ON UNDISTURBED, FIRM NATURAL SOIL, OR COMPACTED FILL CAPABLE OF SUPPORTING A DESIGN BEARING PRESSURE OF 1,500 PSF.

D. CONSTRUCTION JOINTS

1. ALL CONSTRUCTION JOINTS SHALL BE CONSTRUCTED IN ACCORDANCE WITH THE APPLICABLE CODE SECTION AND THE TYPICAL CONSTRUCTION JOINT DETAILS SHOWN ON THE STRUCTURAL DRAWINGS.

2. ALL SURFACES OF CONSTRUCTION JOINTS SHALL BE CLEANED TO REMOVE DUST, CHIPS, OR OTHER FOREIGN MATTER PRIOR TO PLACING THE ADJACENT CONCRETE.

3. THE CONTRACTOR SHALL SUBMIT THE PROPOSED LOCATIONS OF CONSTRUCTION JOINTS FOR APPROVAL BY THE STRUCTURAL ENGINEER BEFORE STARTING CONSTRUCTION

E. CONCRETE

1. DESIGN, MATERIAL, AND WORKMANSHIP SHALL BE IN ACCORDANCE WITH THE FOLLOWING STANDARDS UNLESS OTHERWISE MODIFIED ON THE DRAWINGS OR IN THE SPECIFICATIONS:

   - ACI-347R RECOMMENDED PRACTICE FOR CONCRETE FORMWORK.
   - ACI-318 BUILDING CODE REQUIREMENTS FOR REINFORCED CONCRETE.
   - ACI-315 (REVISED 1986) DETAILS AND DETAILING OF CONCRETE FOR BUILDINGS.
   - ACI-301 SPECIFICATIONS FOR STRUCTURAL CONCRETE FOR BUILDINGS.
   - CRSI RECOMMENDED PRACTICE FOR PLACING REINFORCING STEEL

2. FABRICATION, DELIVERY AND INSTALLATION OF MISCELLANEOUS MATERIALS SHALL BE IN ACCORDANCE WITH PROJECT SPECIFICATIONS, REFER TO ARCHITECTURAL, PIPING, PLUMBING, AND ELECTRICAL DRAWINGS FOR EMBEDDED ITEMS.

3. THE MINIMUM 28 DAYS STRENGTH AND TYPE OF CONCRETE SHALL BE AS FOLLOWS:

   A) FOUNDATIONS.....150 PCF f'c = 4000 PSI
   B) SLABS ON GRADE.....150 PCF f'c = 4000 PSI
   C) MECH. PADS, CURBS, SIDEWALLS, TOPPINGS.....150 PCF f'c = 4000 PSI
   D) WALLS AND COLUMNS.....150 PCF f'c = 4000 PSI

4. DIMENSIONS SHOWN FOR LOCATION OF REINFORCING ARE TO THE FACE OF MAIN BARS, TIES, ET., AND DENOTE CLEAR COVERAGE. CONCRETE COVER SHALL BE AS FOLLOWS, U.O.N. ON DRAWINGS:
   (REFERENCE ACI 318-08)

   CAST-IN-PLACE CONCRETE (NON-PRESTRESSED)

   A) CONCRETE CAST AGAINST AND PERMANENTLY EXPOSED TO EARTH . 3"

   B) CONCRETE EXPOSED TO EARTH OR WEATHER BUT PLACED IN FORMS.
      #6 THROUGH #18 BARS ..... 2"
      #5 BARS, W31 OR D31 WIRE, AND SMALLER ..... 1 1/2"

   C) CONCRETE NOT EXPOSED TO WEATHER OR IN CONTACT WITH GROUND
      STRUCTURAL / SUPPORTED SLABS, WALLS OR JOISTS.
      #11 BARS AND SMALLER ..... 3/4"

   BEAMS AND COLUMNS:
   PRIMARY REINFORCEMENT, STIRRUPS, HOOPS, TIES, SPIRALS ..... 1 1/2"

5. NO PIPES OR DUCTS SHALL BE PLACED IN CONCRETE SLABS OR WALLS UNLESS SPECIFICALLY DETAILED.

6. REFER TO ARCHITECTURAL, STRUCTURAL, ELECTRICAL, AND MECHANICAL DRAWINGS FOR ALL MOLDS, GROOVES, ORNAMENTS, CLIPS AND GROUNDS TO BE CAST IN CONCRETE.

7. FORMS SHALL BE PROPERLY CONSTRUCTED CONFORMING TO CONCRETE SURFACE AS SHOWN ON THE DRAWINGS, SUFFICIENTLY TIGHT TO PREVENT LEAKAGE, SUFFICIENTLY STRONG AND BRACED TO MAINTAIN THEIR SHAPE AND ALIGNMENT UNTIL NO LONGER NEEDED TO SUPPORT THE CONCRETE.

8. FORMS AND SHORING SHALL NOT BE REMOVED UNTIL THE CONCRETE HAS ATTAINED SUFFICIENT STRENGTH TO WITHSTAND ALL LOADS TO BE IMPOSED WITHOUT EXCESSIVE STRESS, CREEP OR DEFLECTION.

9. ALL ITEMS TO BE CAST IN CONCRETE SUCH AS REINFORCING, DOWELS, BOLTS, ANCHORS, PIPES, SLEEVES, ETC. SHALL BE SECURELY POSITIONED IN THE FORMS BEFORE PLACING THE CONCRETE.

10. SEE ARCHITECTURAL, ELECTRICAL, AND MECHANICAL DRAWINGS FOR SIZE AND LOCATION OF PIPES, SLEEVES, PITS AND DETAILS NOT SHOWN ON THESE STRUCTURAL DRAWINGS. ALL DIMENSIONS ARE TO BE CHECKED AND VERIFIED WITH THE ARCHITECTURAL, ELECTRICAL AND MECHANICAL DRAWINGS.

11. MINIMUM EMBEDMENT FOR ANCHOR BOLTS IN CONCRETE SHALL BE 12", U.O.N.

12. THE CONTRACTOR SHALL INFORM THE ARCHITECT/ENGINEER AT LEAST 2 DAYS PRIOR TO POURING ANY STRUCTURAL CONCRETE SO THAT HE MAY HAVE THE OPPORTUNITY OF REVIEWING THE WORK PRIOR TO PLACEMENT.

13. BARS SHALL BE CLEAN OR RUST, GREASE OR OTHER MATERIALS LIKELY TO IMPAIR BOND. ALL REINFORCING BAR BENDS SHALL BE MADE COLD.

E. CONCRETE (CONTD.)

14. REINFORCING BAR SPLICES SHALL BE MADE AS INDICATED ON THE DRAWINGS. MINIMUM SPLICE LENGTH FOR REINFORCING STEEL BARS IN CONCRETE SHALL BE AS PER APPLICABLE TABLES ON SHEET S1.02. LAP ALL HORIZONTAL BARS AT CORNERS AND INTERSECTIONS. STAGGER ALL SPLICES, U.O.N. ON PLANS.

15. ALL BARS SHALL BE MARKED SO THEIR IDENTIFICATION CAN BE MADE WHEN THE FINAL IN-PLACE INSPECTION IS MADE.

16. WHERE WELDING OF REINFORCING IS APPROVED BY THE STRUCTURAL ENGINEER, IT SHALL BE DONE BY AWS CERTIFIED WELDERS USING E90XX OR APPROVED ELECTRODES. WELDING PROCEDURES SHALL CONFORM TO THE REQUIREMENTS OF STRUCTURAL WELDING CODE REINFORCING STEEL, AWS-D1.4, LATEST REVISIONS. REINFORCING BARS TO BE WELDED SHALL CONFORM TO THE REQUIREMENTS OF ASTM A-706.

17. ALL COLUMN POCKETS TO BE FILLED WITH CONCRETE AFTER COLUMN IS ERECTED.

18. SLEEVES AND OPENINGS IN BEAMS, JOIST AND SLABS NOT SHOWN ON STRUCTURAL DRAWINGS ARE NOT PERMITTED UNLESS APPROVED BY THE STRUCTURAL ENGINEER.

19. CONDUIT PLACED IN CONCRETE SLABS SHALL BE NO LARGER THAN 1/3 THE SLAB THICKNESS AND SHALL BE PLACED NO CLOSER THAN 6" ON CENTER.

20. CONTRACTOR TO SUBMIT PROPOSED CONTROL/CONSTRUCTION JOINT LAYOUT DRAWING TO STRUCTURAL ENGINEER FOR REVIEW PRIOR TO COMMENCING WORK.

21. PROVIDE CONTROL JOINTS IN ALL RETAINING WALLS AT 20 FT INTERVALS.

22. SEE ARCHITECTURAL DRAWINGS FOR ALL WATERPROOFING REQUIREMENTS.

23. CONSTRUCTION JOINTS IN WALLS TO BE KEYED AND PLACED AT APPROVED LOCATIONS.

24. CONSTRUCTION JOINTS IN CONCRETE SLABS, GRADE BEAMS AND WALLS TO BE KEYED AND LOCATED NEAR CENTER OF SPAN.

F. SLABS ON GRADE

1. PROVIDE CONCRETE SLABS PER PLAN.

2. ALL WELDED WIRE FABRIC SHALL BE IN ACCORDANCE WITH ASTM A-185. LAP ADJOINING PIECES AT LEAST ONE FULL MESH. WELDED WIRE FABRIC SHALL BE ORDERED IN SHEETS, NOT ROLLS. WELDED WIRE FABRIC SHALL BE BLOCKED INTO POSITION WITH PRECAST CONCRETE BLOCKS HAVING THE SAME COMPRESSIVE STRENGTH OF THE SLAB. THE ALTERNATE WIRES OF THE WELDED WIRE FABRIC MUST BE PRECUT AT THE SLAB CONTRACTION JOINT LOCATIONS TO CREATE A "WEAKENED PLANE". CONTROL JOINTS SHALL BE SPACED NO MORE THAN 15 FEET ON CENTER. THE JOINTS SHALL BE 1/4" WIDE x 1" DEEP. THE USE OF POLYPROPYLENE FIBERS (IN LIEU OF WELDED WIRE FABRIC) IS PROHIBITED.

3. ALL POROUS FILL MATERIAL SHALL BE A CLEAN GRANULAR FILL MATERIAL WITH 100% PASSING THE 1" SIEVE AND NO MORE THAN 5" PASSING THE NO. 4 SIEVE. POROUS FILL SHALL BE COMPACTED TO 95% MAX DRY DENSITY PER ASTM D- 1557 MODIFIED PROCTOR METHOD.

4. THE SLAB SHALL BE WET CURED BY KEEPING THE SLAB MOIST FOR A PERIOD OF SEVEN DAYS. ALTERNATIVELY, PROVIDE A WET - CURING SEALANT PER THE MANUFACTURERS RECOMMENDATIONS. SLAB JOINTS SHALL BE FILLED WITH A SEALANT PER THE MANUFACTURER RECOMMENDATIONS.

Strucutal Innovations, LLC
1011 Bay Street, Suite 306
Beaufort, South Carolina 29902
www.structuralInnovationsllc.com
ph. 843.441.9828 email:arichardson@structural innovations llc.com

SOUTH CAROLINA STRUCTURAL INNOVATIONS, LLC No. 3686 CERTIFICATE OF AUTHORIZATION

No.	REVISIONS	BY	DATE

WESTIN HILTON HEAD ISLAND
RESORT AND SPA EXPANSION
TOWN OF HILTON HEAD ISLAND, SC

STRUCTURAL NOTES

SOUTH CAROLINA PROFESSIONAL ENGINEER No. 22824 PHILIP ANDREW RICHARDSON

DATE	09/12/16
SCALE	AS SHOWN
PROJECT NO	16-0**

Sheet No.
S1.01

NOTES - STRUCTURAL

G. REINFORCING STEEL

1. REINFORCING STEEL DETAILING, FABRICATION, AND PLACEMENT SHALL CONFORM TO THE IBC 2012. THE ACI "MANUAL OF STANDARD PRACTICE FOR DETAILING REINFORCED CONCRETE STRUCTURES", LATEST EDITION, AND THE "BUILDING CODE REQUIREMENTS FOR STRUCTURAL CONCRETE AND COMMENTARY", ACI 318-08; UNLESS NOTED OTHERWISE.

2. REINFORCING STEEL SHALL CONFORM TO THE FOLLOWING STANDARDS:

   DEFORMED BARS, #3 ..... ASTM A615, GRADE 40
   DEFORMED BARS, #4 AND LARGER ..... ASTM A615, GRADE 60
   WELDED WIRE FABRIC, WWF (SMOOTH WIRE) ..... ASTM A185
   SMOOTH WIRE NOT IN WWF ..... ASTM A185
   DEFORMED WIRE FABRIC, DWF (DEFORMED WIRE) ..... ASTM A497
   DEFORMED WIRE NOT IN DWF ..... ASTM A496
   WELDED REINFORCEMENT, WHEN SPECIFIED ..... ASTM A706
   SPIRALS REINFORCEMENT, SMOOTH ..... ASTM A615
   SPIRALS REINFORCEMENT, DEFORMED ..... ASTM A615
   EPOXY COATED REINFORCING, WHEN SPECIFIED ..... ASTM A775 and A515

3. ALL BARS SHALL HAVE A MINIMUM "LAP SPLICE" OR "DEVELOPMENT LENGTH" PER APPROPRIATE TABLES ON S1.02 U.O.N.: WWF SHALL BE CONTACT LAP SPLICED TWO WIRE SPACES.

4. REINFORCING SPACING GIVEN ARE MAXIMUM ON CENTER AND ALL REINFORCING IS CONTINUOUS UNLESS OTHERWISE NOTED.

5. ALL REINFORCING STEEL SHALL BE SECURELY WIRED AND PROPERLY SUPPORTED ABOVE GROUND AND AWAY FROM THE FORM.

6. REINFORCING BAR FABRICATION LAPS AND PLACING SHALL CONFORM TO THE LATEST EDITION OF ACI 315 "DETAILS AND DETAILING OF CONCRETE REINFORCEMENT" AND CRSI "MANUAL OF STANDARD PRACTICE" - UNLESS OTHERWISE NOTED ON DRAWINGS.

7. DOWEL ALL VERTICAL REINFORCING IN WALLS AND COLUMNS FROM FOUNDATION WITH THE SAME SIZE REINFORCING. (U.O.N.)

8. SPLICES IN ADJACENT BARS SHALL BE NOT LESS THAN 2'-0" CLEAR DISTANCE.

9. SPLICE CONTINUOUS BARS IN SPANDRELS, GRADE BEAMS, WALL BEAMS, ETC. AS FOLLOWS: TOP BARS AT MID-SPAN. BOTTOM BARS AT CENTERLINE SUPPORT (U.O.N.)

10. DO NOT WELD STRUCTURAL REINFORCING STEEL UNLESS EXPLICITLY DIRECTED BY THE STRUCTURAL ENGINEER OF RECORD.

REINFORCEMENT DEVELOPMENT LENGTHS (Ld OR CLASS A, INCHES)

REINFORCEMENT CONCRETE — f'c = 4000 PSI AT 28 DAYS

REINF LOCATION	REINFORCEMENT SIZE								
	#3 GR40	#4	#5	#6	#7	#8	#9	#10	#11
TOP	13	25	31	37	54	62	70	79	87
OTHER	12	19	24	29	42	48	54	61	67

REINFORCEMENT DEVELOPMENT LENGTHS (Ld OR CLASS A, INCHES)

REINFORCEMENT CONCRETE — f'c = 5000 PSI AT 28 DAYS

REINF LOCATION	REINFORCEMENT SIZE								
	#3 GR40	#4	#5	#6	#7	#8	#9	#10	#11
TOP	12	23	28	34	49	56	63	71	78
OTHER	12	17	22	26	38	43	48	54	60

REINFORCEMENT LAP SPLICES (CLASS B, INCHES)

REINFORCEMENT CONCRETE — f'c = 4000 PSI AT 28 DAYS

REINF LOCATION	REINFORCEMENT SIZE								
	#3 GR40	#4	#5	#6	#7	#8	#9	#10	#11
TOP	17	33	41	49	71	81	91	103	114
OTHER	16	25	32	38	55	63	71	80	88

REINFORCEMENT DEVELOPMENT LENGTH OF STANDARD HOOKS. (INCHES)

REINFORCEMENT CONCRETE — f'c = 4000 PSI AT 28 DAYS

REINF	REINFORCEMENT SIZE							
	#3	#4	#5	#6	#7	#8	#9	#10
TOP	8	10	12	15	17	19	22	25

NOTES:

TOP REINFORCING IS HORIZONTAL REINFORCEMENT THAT HAS MORE THAN TWELVE INCHES OF CONCRETE PLACED BELOW IT.

USE WELDED SPLICE OR MECHANICAL CONNECTOR IF THE LAP SPLICE REINFORCEMENT DOES NOT HAVE A MINIMUM SPACING 3db + ⅛ INCHES AND A MINIMUM COVER OF db + ⅛ INCHES.

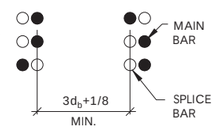

WELDED SPLICE (DIRECT BUTT SPLICES-FULL PENETRATION)

#5 AND SMALLER SINGLE - BEVEL GROOVE WELD
#6 AND LARGER DOUBLE - BEVEL GROOVE WELD
WELDS SHALL HAVE THE ABILITY TO DEVELOP 125 PERCENT OF THE YIELD STRENGTH FOR THE SPLICED REINFORCEMENT (75 KSI)

MECHANICAL CONNECTORS

MECHANICAL CONNECTORS SHALL HAVE AND BE INSTALLED PER AN EVALUATION REPORT FROM ICBO EVALUATION SERVICE, INC.

H. EMBEDDED ITEMS AND ANCHORS FOR CONCRETE AND MASONRY

1. ALL BOLTS OR REINFORCING BAR DOWELS ATTACHED TO EXISTING CONSTRUCTION SHALL BE EPOXY GROUTED INTO EXISTING CONCRETE U.O.N. EPOXY GROUTED ANCHORS SHALL HAVE EQUIVALENT DESIGN VALUES TO THE PUBLISHED DESIGN VALUES BY HILTI HIT RE-F00 (ICBO REPORT NO. ESTR-2322). SUBMIT TECHNICAL DATA TO STRUCTURAL ENGINEER FOR APPROVAL.

2. ALL ANCHORS NOTED AS EXPANSION (EXP) ANCHORS SHALL HAVE EQUIVALENT DESIGN VALUES TO THE PUBLISHED DESIGN VALUES TO HILTI KWIK BOLT-TZ (ICBO REPORT NO. ESR-1917). SUBMIT TECHNICAL DATA TO THE STRUCTURAL ENGINEER FOR APPROVAL.

3. WHEN INSTALLING ANCHOR BOLTS, INSERTS, OR DOWELS INTO EXISTING CONCRETE, USE A MECHANICAL REBAR LOCATING DEVICE TO LOCATE EXISTING REINFORCING AND DRILL HOLE TO MISS REINFORCEMENT.

I. METAL DECK

1. INSTALL DECKING PER AWS S1.3, AND FOLLOW ANSI/SDI QA/QC-2001 STANDARD FOR QUALITY CONTROL AND QUALITY ASSURANCE FOR INSTALLATION OF STEEL DECK TO PROMOTE QUALITY IN DECK INSTALLATION.

2. MECHANICAL FASTENERS OF EQUIVALENT CAPACITY ARE ACCEPTABLE TO WELDED CONNECTIONS SHOWN.

J. STRUCTURAL STEEL

1. ALL DESIGN, FABRICATION AND ERECTION SHALL CONFORM TO THE AISC STEEL CONSTRUCTION MANUAL. WELDING SHALL CONFORM TO THE LATEST AWS AND AISC SPECIFICATIONS.

2. WORKMANSHIP SHALL BE IN ACCORDANCE WITH THE BEST PRACTICE AND WITHIN THE TOLERANCES SPECIFIED IN THE AISC SPECIFICATION FOR STRUCTURAL STEEL.

3. IT IS SPECIFICALLY NOTED THAT BURNED HOLES ARE NOT ACCEPTABLE UNLESS SPECIAL PERMISSION IS GIVEN BY ENGINEER.

4. ALL SHOP FABRICATED WORK SHALL BE DONE IN A SHOP APPROVED BY THE GOVERNING AGENCY. FABRICATOR SHALL SUBMIT PROGRAM OF WELDING INSPECTION TO ENGINEER FOR APPROVAL.

5. ALL STRUCTURAL STEEL SHALL BE AS FOLLOWS UNO:
   ALL WF, WT SHAPES .....A992 GRADE 50
   CONNECTION PL & MISC STEEL (UNO)...ASTM A36
   GUSSET & COLLECTOR PLATES.....ASTM A572 GRADE 50
   PIPE COLUMNS (TYPE S, SEAMLESS).....ASTM A53 GRADE B
   STRUCTURAL TUBING.....ASTM A500 GRADE B
   ANGLE, CHANNELS.....ASTM A36
   THREADED ROD.....ASTM A36
   HEADED SHEAR STUDS.....ASTM A108, GRADE 1015 TO 1020
   STAINLESS STEEL.....TYPE 316, 50 KSI

6. ALL HIGH STRENGTH BOLTS SHALL BE ASTM A325-N TYPE UNLESS OTHERWISE NOTED.

7. ALL BOLTS USED FOR ERECTION SHALL BE ASTM A325 TYPE WITH THREADS EXCLUDED FROM SHEAR PLANES.

8. ALL PLAIN ANCHORS SHALL BE A36; ALL ANCHOR BOLTS SHALL COMPLY WITH ASTM F1554. 3" MINIMUM CONCRETE COVER WILL BE PLACED AROUND ALL ANCHOR BOLTS EXPOSED TO WEATHER, U.N.O.

9. WELDING MATERIALS PROVIDE TYPE REQUIRED FOR MATERIALS BEING WELDED, PER AWS D1.1.

10. PROVIDE CONTINUOUS INSPECTION FOR ALL FABRICATION AND WELDING OF STRUCTURAL STEEL IN ACCORDANCE WITH CODE REQUIREMENTS. ALL COMPLETE PENETRATION GROOVE WELDS IN JOINTS AND SPLICES SHALL BE TESTED 100 PERCENT IN ACCORDANCE WITH IBC. USE ONE OF THE APPROVED METHODS OF TIGHTENING HIGH STRENGTH BOLTS.

11. A WELDING SEQUENCE SHALL BE PLANNED TO MINIMIZE RESIDUAL STRESSES AND DISTORTIONS OF INDIVIDUAL MEMBERS AND THE BUILDING FRAME. ALL DETAILING, FABRICATION, AND ERECTION SHALL COMPLY WITH AISC, LATEST EDITION.

12. UNLESS OTHERWISE NOTED, ALL STIFFENER PLATES ARE 3/8" THICK MINIMUM AND ALL BUTT WELDS ARE FULL PENETRATION WELDS. ERECTION CLIPS, TEMPORARY BRACING, ETC., REQUIRED BY THE CONTRACTOR ARE NOT SHOWN.

13. SUBMIT SHOP DRAWINGS FOR THE FABRICATION AND ERECTION OF ALL ASSEMBLIES OF STRUCTURAL STEEL WORK. INCLUDE PLANS AND ELEVATIONS AT NOT LESS THAN 1/8" TO 1'-0" SCALE, AND INCLUDE DETAILS OF SECTIONS AT NOT LESS THAN 1" TO 1'-0" SCALE.

14. NO FINISH FABRICATION SHALL BE COMMENCED OR MATERIAL DELIVERED TO THE JOB UNTIL THE ENGINEER HAS REVIEWED AND APPROVED THE SHOP DRAWINGS

15. ALL STRUCTURAL STEEL SHALL BE PAINTED WITH ONE SHOP COAT OF ZINC CHROMATE PRIMER OR EQUAL. AFTER ERECTION, FIELD CONNECTIONS SHALL BE TOUCHED UP. DO NOT PAINT PORTION OF STEEL TO BE EMBEDDED IN CONCRETE, HEADED ANCHOR STUDS, FRAYING SURFACES OR AREAS TO RECEIVE FIRE PROOFING EXTERIOR. EXPOSED STEEL MEMBERS ARE SPECIFIED TO BE HOT-DIPPED GALVANIZED OR STAINLESS STEEL.

16. WELD LENGTHS CALLED FOR ON PLANS ARE THE NET EFFECTIVE LENGTH REQUIRED. WHERE FILLET WELD SYMBOL IS GIVEN WITHOUT INDICATION OF SIZE, USE MINIMUM SIZE WELDS AS SPECIFIED IN AISC MANUAL OF STEEL CONSTRUCTION LATEST EDITION. HIS INCLUDES OPEN WEB JOIST CONNECTIONS.

17. THE USE OF E70-4 WELDING WIRE IS NOT ALLOWED FOR ANY APPLICATION.

J. STRUCTURAL STEEL (CONTD.)

18. WRITTEN WELDING PROCEDURE SPECIFICATIONS (WPS) PER THE RECOMMENDATIONS OF THE AMERICAN WELDING SOCIETY (AWS) SHALL BE DEVELOPED BY THE FABRICATOR/ERECTOR AND SUBMITTED FOR REVIEW BY THE ENGINEER PRIOR TO ANY WELDED JOINTS AND CONFIGURATIONS TO BE USED ON HIS PROJECT-ONLY WPS WHICH ARE RELEVANT TO THIS PROJECT SHALL BE SUBMITTED. ALL WELDED JOINTS SHALL BE PRE-QUALIFIED PER AWS OR BE QUALIFIED BY TEST PER AWS. A PROCEDURE QUALIFICATION RECORD (PQR) SHALL BE INCLUDED WITH THE WPS IF THE WELDING PROCEDURE OR JOINT IS QUALIFIED BY TESTING. THE ELECTRODE MANUFACTURER AND PRODUCT/TRADE NAME SHALL BE IDENTIFIED IN THE WPS IN ADDITION TO THE AWS ELECTRODE CLASSIFICATION NAME. A COPY OF THE ELECTRODE MANUFACTURER'S TECHNICAL DATA SHEETS WITH THE RECOMMENDED WELDING PARAMETERS SHALL BE SUBMITTED WITH THE WPS.

19. DO NOT WELD ANY STRUCTURAL STEEL MEMBER OR CONNECTION UNLESS EXPLICIT CALLED OUT IN THE CONTRACT DOCUMENTS.

20. WELD SYMBOLS SHOW FINAL WELD REQUIRED. THE CHOICE TO WELD IN THE FIELD OR IN THE SHOP SHALL BE UP TO THE CONTRACTOR AND SHALL BE INDICATED IN THE FABRICATOR'S SHOP DRAWINGS.

21. ALL STRUCTURAL STEEL SHALL BE PROPERLY GUYED AND BRACED UNTIL FLOOR AND ROOF FRAMING SYSTEM AND LATERAL LOAD RESISTING SYSTEM IS IN PLACE.

22. THE STRUCTURE IS CONSIDERED A NON-SELF-SUPPORTING STEEL FRAME. THE CONTRACTOR SHALL PROVIDE ADEQUATE TEMPORARY SUPPORTS UNTIL ALL PERMANENT SHEAR WALLS, MOMENT FRAMES, BRACED FRAMES, AND FLOOR SLABS ARE IN PLACE.

23. DETAIL STEEL BEAM CONNECTIONS AS SIMPLE SPAN BEAMS, UNLESS OTHERWISE NOTED.

24. ALL BEAM CONNECTIONS SHALL BE DETAILED TO PROVIDE A SHEAR CONNECTION WITH A MINIMUM DESIGN CAPACITY AS THAT SHOWN IN THE DRAWINGS BEAMS SHEAR TAB CONNECTION TABLE FOR THE CORRESPONDING BEAM SIZE.

25. ALL CONNECTIONS NOT DETAILED OR OTHERWISE NOTED SHALL BE DESIGNED AS AISC TYPE 2 BOLTED CONNECTIONS DESIGNED FOR FULL LOAD CAPACITY OF THE CONNECTING MEMBERS.

26. ALL BOLTS IN MOMENT CONNECTIONS SHALL BE BEARING TYPE CONNECTIONS.

27. ALL BOLTS IN HANGER CONNECTIONS SHALL BE PRE-TENSIONED.

28. ALL WELDS SHALL BE MADE BY WELDERS CERTIFIED ACCORDING TO AWS PROCEDURES.

29. CONNECTIONS ARE TO BE DESIGNED AND SEALED BY THE FABRICATOR'S SPECIALTY ENGINEER.

Strucutal Innovations, LLC
1011 Bay Street, Suite 306
Beaufort, South Carolina 29902
www.structuralinnovationsllc.com
ph. 843.441.9828 email:arichardson@structural innovations llc.com

SOUTH CAROLINA STRUCTURAL INNOVATIONS, LLC No. 3686 CERTIFICATE OF AUTHORIZATION

No.	REVISIONS	BY	DATE

WESTIN HILTON HEAD ISLAND RESORT AND SPA EXPANSION
TOWN OF HILTON HEAD ISLAND, SC

STRUCTURAL NOTES

SOUTH CAROLINA PROFESSIONAL ENGINEER No. 22824 PHILIP ANDREW RICHARDSON

DATE	09/12/16
SCALE	AS SHOWN
PROJECT NO	16-0**

Sheet No.
S1.02

NOTES - STRUCTURAL

K. METAL STUDS AND JOIST NOTES

1. MATERIAL SHALL CONFORM TO ASTM A 446 GRADE D WITH MIN. YIELD POINT OF 50 KSI.
2. MATERIAL SHALL BE GALVANIZED IN ACCORDANCE WITH ASTM A 525, G60 COATING DESIGNATION.
3. WELDING SHALL CONFORM TO AISI & AWS D1.3 SPECIFICATIONS.
4. ALL CONNECTIONS SHALL BE SCREWED OR WELDED PER DRAWINGS.
5. STUDS SHALL BE INSTALLED AS INDICATED ON DRAWINGS. PROVIDE MIN. ONE JACK STUDS & TWO FULL HEIGHT STUDS AT EACH END OF THE OPENING U.N.O.
6. STUDS SHALL HAVE A BRIDGING LINE INSTALLED AT A MAXIMUM DISTANCE OF 4'-0".
7. THE NOMENCLATURE USED ON DRAWINGS IS PER SSMA & AISI. THE SECTIONS SUPPLIED BY THE MANUFACTURER SHALL SHALL MEET OR EXCEED THE STRENGTH OF SPECIFIED MEMBERS.
8. FOR SCREWS 3/4" MINIMUM CLEARANCE MUST BE MAINTAINED FROM ALL EDGES OF THE STEEL MEMBERS. A 3/4" MINIMUM ON CENTER SPACING MUST BE MAINTAINED BETWEEN ADJACENT SCREWS.
9. PROVIDE BOTTOM TRACK 18 GA. MINIMUM U.N.O.
10. PROVIDE (1)#10-16 SCREW EACH FLANGE AT SIDE EACH STUD TO TOP/BOTTOM TRACK U.N.O.
11. ALL FIELD CUTTING OF STUDS MUST BE DONE B SAWING OR SHEARING . TORCH CUTTING OF COLD-FORMED MEMBERS IS NOT PERMITTED.
12. NO NOTCHING OR COPING OF STUDS IS ALLOWED UNLESS STATED WITHIN THE DRAWINGS PACKAGE.
13. END STUDS MUST BE SEATED IN RUNNER TRACK, WHICH MUST HAVE FULL BEARING ON STRUCTURE.
14. FRAMING CONTRACTOR IS TO ENSURE PUNCHOUT ALIGNMENT WHEN ASSEMBLING LATERAL BRACING AND FIELD CUTTING STUDS. LATERAL BRACING MUST BE INSTALLED AT THE TIME THE WALL IS ERECTED.
15. USE MINIMUM OF THREE STUDS AT THE CORNERS OF ALL EXTERIOR WALLS U.N.O.
16. ALL METAL TO METAL SCREW CONNECTIONS ARE BASED ON SECTION E4 OF THE 2012 AISI SPECIFICATION FOR DESIGN OF COLD-FORMED STEEL MEMBERS WHICH OUTLINES PROVISIONS FOR METAL TO METAL SCREW CONNECTIONS.
17. POWER DRIVEN FASTENERS SYSTEMS AND EXPANSION ANCHORS SYSTEMS ARE BASED ON LITERATURE PUBLISHED BY HILTI FASTENING SYSTEMS INC. ALTERNATE MANUFACTURE'S FASTENERS OF COMPARABLE SPECIFICATION AND LOAD CAPACITY ARE ACCEPTABLE. PROVIDE SHOP DRAWINGS AN LITERATURE OF ALTERNATES.
18. SHOP DRAWINGS SHALL BE PROVIDED FOR LIGHT GAUGE FRAMING, INCLUDING CONNECTIONS, BRIDGING AND BRACING PROVISIONS

L. STRUCTURAL OBSERVATION

1. STRUCTURAL OBSERVATION WILL BE PERFORMED BY THE STRUCTURAL ENGINEER OF RECORD OR DESIGNEE IN ACCORDANCE WITH THE REFERENCE CODES.
2. STRUCTURAL OBSERVATION IS THE VISUAL OBSERVATION OF THE ELEMENTS AND CONNECTIONS OF THE STRUCTURAL SYSTEM AT SIGNIFICANT CONSTRUCTION STAGES AND THE COMPLETED STRUCTURAL FOR GENERAL CONFORMANCE TO THE APPROVED PLANS AND SPECIFICATION. STRUCTURAL OBSERVATION DOES NOT WAIVE THE RESPONSIBILITY FOR THE INSPECTIONS REQUIRED OF THE BUILDING INSPECTOR.
3. THE CONTRACTOR SHALL COORDINATE AND CALL FOR A PRE-CONSTRUCTION MEETING BETWEEN THE ENGINEER OR ARCHITECT RESPONSIBLE FOR THE STRUCTURAL DESIGN, STRUCTURAL OBSERVER, CONTRACTOR, AFFECTED SUBCONTRACTORS, BUILDING AND DEPUTY INSPECTORS. THE PURPOSE OF THE MEETING SHALL BE TO IDENTIFY THE MAJOR STRUCTURAL ELEMENTS AND CONNECTIONS THAT AFFECT THE VERTICAL AND LATERAL LOAD SYSTEMS OF THE STRUCTURE AND TO REVIEW SCHEDULING OF REQUIRED OBSERVATIONS.
4. THE STRUCTURAL OBSERVER SHALL PERFORM SITE VISITS AT THOSE STEPS IN THE PROGRESS OF HE WORK THAT ALLOW FOR CORRECTION OF DEFICIENCIES WITHOUT SUBSTANTIAL EFFORT OR CONSTRUCTION STAGES REQUIRE A SITE VISIT.

CONSTRUCTION STAGES	ELEMENTS/CONNECTIONS TO BE OBSERVED
FOUNDATIONS	REINFORCEMENT/DOWELS/ANCHORS
STEEL ERECTION	CONNECTIONS /DETAILING
LIGHT GAUGE STEEL	CONNECTIONS /DETAILING
FLOOR/ROOF DEC ING	PANEL LAYOUT/CONNECTIONS

M. SPECIAL INSPECTION

SPECIAL INSPECTIONS ARE REQUIRED FOR THIS PROJECT, AND SHALL BE FOLLOWED, THE WORK REQUIRING SPECIAL INSPECTIONS INCLUDES, BUT IS NOT LIMITED TO THE FOLLOWING:

A) MATERIAL VERIFICATION OF HIGH-STRENGTH BOLTS, NUTS, WASHERS, STRUCTURAL STEEL AND WELD FILLER MATERIAL
B) INSPECTION OF HIGH-STRENGTH BOLTING AND WELDING
C) INSPECTION OF STEEL FRAME JOINTS DETAILS, ALSO INSPECTION OF METAL DECK & GAUGE STEEL DETAILS AND CONNECTIONS FOR COMPLIANCE WITH APPROVED CONSTRUCTION DOCUMENTS
D) VERIFICATION AND INSPECTION OF CONCRETE MIX DESIGN, REINFORCING, EMBEDDED ITEMS, CONCRETE SAMPLES, AND CURING TECHNIQUES
E) CONCRETE STRENGTH TESTS
F) ALL STRUCTURAL STEEL WELDING, EXCEPT WERE DONE IN THE SHOP OF AN APPROVED FABRICATOR
G) REINFORCING STEEL (WHERE f'c IS GREATER THAN 2500 PSI OR REINFORCING IS WELDED)
H) USE OF STRUCTURAL EPOXIES
I) SOIL COMPACTION REQUIREMENTS
J) ADHESIVE AND DRILLED-IN EXPANSION ANCHORS
K) DETAILS & CONNECTIONS OF PRE-ENGINEERED METAL BUILDING ARE INSPECTED AS NOTED ON PRE-ENGINEERED METAL BUILDING DRAWING.

SPECIAL INSPECTIONS PROCEDURES SHALL BE AS DEFINED IN CHAPTER 17 OF THE 2015 INTERNATIONAL BUILDING CODE.

THE CONTRACTOR SHALL COORDINATE AND SCHEDULE THE WORK TO ALLOW FOR REQUIRED SPECIAL INSPECTIONS WITHOUT DELAYING THE PERFORMANCE OF THE WORK, A MINIMUM OF 48 HOURS ADVANCE NOTICE SHALL BE PROVIDED TO SPECIAL INSPECTIONS BY THE CONTRACTOR.

N. PILES

1. ALL PILES SHALL BE 12" DIAMETER TAPERED CREOSOTED TIMBER PILES (PRESERVATIVE-TREATED ROUND PILES), OF MINIMUM LENGTH PER SOIL REPORT AND A MINIMUM AXIAL LOAD CAPACITY OF 15 TONS. FOR ADDITIONAL INFORMATION, SEE SOILS REPORT.
2. CONTRACTOR TO PROVIDE ROUND, CLEAN-PEELED TIMBER PILES, ONE PIECE FROM BUTT TO TIP,ALL IN STRICT ACCORDANCE WITH ASTM D25 AND AWPA STANDARD C3.
3. ALL REQUIRED FIELD TREATMENT TO TIMBER PILES (CUTS AND PENETRATIONS) TO BE DONE IN ACCORDANCE WITH AWPA STANDARD M4.
4. ALL PILING WORK SHALL COMPLY WITH THE LATEST EDITION OF ALL APPLICABLE LOCAL BUILDING CODES.

O. TEST PILES

1. THE CONTRACTOR SHALL, BEFORE ORDERING THE PILES, DRIVE A SUFFICIENT NUMBER OF TEST PILES TO DETERMINE THE NECESSARY LENGTHS. THIS WORK IS TO BE DONE AT NO ADDITIONAL COST TO THE OWNER; THE CONTRACTOR SHALL BE RESPONSIBLE FOR DETERMINING THE LENGTHS OF PILES TO BE ORDERED FOR THE WORK.

P. PILE DRIVING

1. PILES SHALL BE DRIVEN WITH A SINGLE OR DOUBLE ACTING HAMMER. THE REQUIRED DRIVING RESISTANCE SHALL BE DETERMINED ACCORDING TO THE ENGINEERING NEWS RECORD FORMULA.
2. DRIVING SHALL BE DONE WITH FIXED LEADS WHICH WILL HOLD THE PILE FIRMLY IN POSITION AND ALIGNMENT AND IN AXIAL ALIGNMENT WITH THE HAMMER. SUITABLE ANVILS OR CUSHIONS SHALL BE USED TO PREVENT UNDUE DAMAGE TO THE PILE BUTT.
3. OBSTRUCTIONS AND/ OR DEBRIS ARE ANTICIPATED TO BE PRESENT IN THE FILL MATERIALS AT THE SITE. THE CONTRACTOR SHALL RESORT TO ALL COMMONLY USED MEANS AT NO ADDITIONAL COST TO THE OWNER. CONSULT WITH GEOTECHNICAL ENGINEER ABOUT USING SPUDDING AND PRE-EXCAVATION, ETC; TO PREVENT DAMAGE TO PILES DURING INSTALLATION AND TO ADVANCE PILES THROUGH OBSTRUCTIONS OR DEBRIS ENCOUNTERED. THE CONTRACTOR SHALL BE RESPONSIBLE FOR THE COST OF REPLACING ALL PILES DAMAGED DURING INSTALLATION.
4. TOPS OF PILES SHALL BE CUT OF LEVEL . SHOULD THE TOP OF ANY PILE BE DAMAGED BELOW THE CUT OF LEVEL BY ACTION OF THE HAMMER, IT SHALL BE CUT OF TO THE LEVEL OF THE UNDAMAGED SECTION AND THE PILE BE BUILT UP OF SHALL ENCASED CONCRETE TO THE SUBGRADE LEVEL OF THE PILE CAP, AT THE CONTRACTOR'S EXPENSE.
5. THE CONTRACTOR SHALL MARK PILE GROUP WITH PAINT OR KEEL TO INDICATE THE LENGTH OF PILE DRIVEN.
6. IF, DURING THE DRIVING OF ANY PILES, ANY OF THE PILES PREVIOUSLY DRIVEN SHOW SIGNS OF HEAVING OR LIFTING, THE CONTRACTOR SHALL RE-DRIVE SUCH PILES TO THE REQUIRED LOAD CAPACITY AND WITHOUT EXTRA COST TO THE OWNER.
7. A DETAILED RECORD OF EACH PILE, AS DRIVEN, INCLUDING THE DIAMETER, LENGTH, DESIGN, PENETRATION UNDER THE LAST BLOWS OF THE HAMMER, PLUMBNESS AND ALL OTHER INFORMATION REGARDING EACH PILE SHALL BE PREPARED BY THE CONTRACTOR CONCURRENTLY WITH THE INSTALLATION OF THE PILES.
8. FOUR (4) COPIES OF THE RECORD ARE TO BE FURNISHED TO THE ENGINEER, ALL SIGNED AND SEALED BY A LICENSED PROFESSIONAL ENGINEER, CERTIFYING THAT THE RECORD ARE TRUE AND COMPLETE AND THAT THE PILES AS DRIVEN ARE ADEQUATE FOR THE REQUIRED LOAD BEARING CAPACITY, ALL IN ACCORDANCE WITH THE REQUIREMENTS OF THE CONTRACT.
9. THE CONTRACTOR SHALL FURNISH ON IDENTIFICATION PLAN SHOWING CLEARLY THE DESIGNATION OF ALL PILES AND TEST PILES TO THE ENGINEER BEFORE THE PILING WORK IS COMMENCED.
10. PILES SHALL BE LOCATED ON THE SITE FROM THIS APPROVED PLAN BY A LICENSED SURVEYOR FURNISHED BY THE CONTRACTOR. THE SURVEYOR SHALL FURNISH A SUFFICIENT NUMBER OF CONVENIENT TIE-IN POINTS, SO THAT THE CERTIFYING PROFESSIONAL ENGINEER CAN EASILY LOCATE THE ACTUAL LOCATION OF EACH PILE AFTER IT IS DRIVEN.

P. PILE DRIVING (CONTD.)

10. SHOULD ANY PILE BE DAMAGED DURING DRIVING OR BE DRIVEN OUTSIDE OF ITS SPECIFIED TOLERANCE FOR POSITION OR NOT TO CONFORM WITH THE REQUIREMENTS OF THE CONTRACT, IT SHALL BE ABANDONED AND ADDITIONAL PILES OR PILES BE INSTALLED IN THE LOCATION DESIGNATED BY THE ENGINEER TO REPLACE THE ABANDONED PILE. THIS IS TO BE DONE AT NO COST TO THE OWNER.
11. IF ANY PILE DRIVEN TO THE SPECIFIED BEARING CAPACITY IN THE ACCEPTED BEARING STRATUM IS FOUND TO BE OUT OF PLUMB MORE THAN 2% OF ITS LENGTH, OR IF ITS CENTER AT THE LEVEL OF THE CUT OFF IS OUT OF POSITION SUCH A DISTANCE THAT ANY PILE IS STRESSED MORE THAN 10% GREATER THAN ITS DESIGNED STRESS, THE CONTRACTOR SHALL PROVIDE AND INSTALL ADDITIONAL PILES AS DIRECTED SO THAT NO PILE IN THE COMPLETED GROUP WILL BE STRESSED MORE THAN 10% GREATER THAN ITS DESIGN STRESS. SUCH ADDITIONAL PILES AND THE REDESIGN AND ADDITIONAL COST OF THE PILE CAP AND ADDITIONAL REINFORCED CONCRETE STRUTS OR GIRDERS AS MAY BE DIRECTED BY THE ENGINEER SHALL BE INSTALLED BY THE CONTRACTOR AT HIS EXPENSE. THE COST OF THE REDESIGN BY THE ENGINEER OF RECORD SHALL BE AT HIS STANDARD HOURLY RATES PLUS EXPENSES AT HIS STANDARD MULTIPLIERS.
12. WORK OF ANY NATURE (INCLUDING THE COST OF RE- DESIGN) REQUIRED ON ACCOUNT OF REJECTED, DAMAGED OR DISPLACED PILES SHALL BE PROVIDED BY THE CONTRACTOR AS DIRECTED AND WITHOUT COST TO THE OWNER.
13. CONTRACTOR TO DRIVE PILES TO THE DEPTH RECOMMENDED ON SOILS REPORT BY MARSHAL ENGINEERING, INC. DATED 10-07-03. PRIOR TO BIDDING CONTRACTOR SHALL INSPECT TEST BORINGS TO ASCERTAIN IF PILING WILL PENETRATE SOIL STRATA AND NOTIFY ARCHITECT IF HE ANTICIPATES ANY PROBLEM PENETRATING THIS STRATA. IF DURING CONSTRUCTION PILES FAIL TO PENETRATE THE SOIL STRATA, THEY SHALL BE INSTALLED USING JETTING TECHNIQUES TO ALLOW PENETRATION. NO EXTRA PAYMENT WILL BE MADE FOR JETTING.
14. PILE TIP SHALL BE SUCH AS TO PERMIT PILING CONTRACTOR TO DRIVE PILES TO CAPACITY WITHOUT DAMAGE TO THE PILE.
15. CONTRACTOR SHALL ASCERTAIN AND SURVEY THE OVERALL INTEGRITY OF THE EXISTING BUILDINGS AND PROTECT THE EXISTING STRUCTURES FROM ANY DAMAGE DURING INSTALLATION OF PILES.
16. DEWATERING, SITE PREPARATION ETC. & ALL REQUIREMENTS OF THE SOIL REPORT TO BE STRICTLY FOLLOWED BY THE CONTRACTOR.

Strucutal Innovations, LLC
1011 Bay Street, Suite 306
Beaufort, South Carolina 29902
www.structuralInnovationsllc.com
ph. 843.441.9828 email:arichardson@structural innovations llc.com

SOUTH CAROLINA STRUCTURAL INNOVATIONS, LLC No. 3686 CERTIFICATE OF AUTHORIZATION

No.	REVISIONS	BY	DATE

WESTIN HILTON HEAD ISLAND RESORT AND SPA EXPANSION
TOWN OF HILTON HEAD ISLAND, SC

STRUCTURAL NOTES

SOUTH CAROLINA LICENSED PROFESSIONAL ENGINEER No. 22824 PHILIP ANDREW RICHARDSON

DATE	09/12/16
SCALE	AS SHOWN
PROJECT NO	16-0**

Sheet No.
S1.03

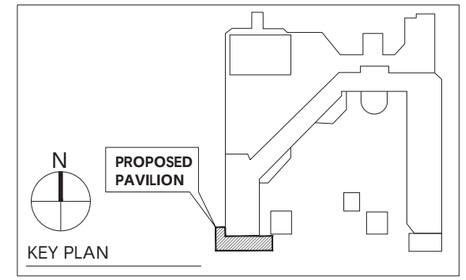

KEY PLAN

NOTES:

1. REFER TO ARCH. DRAWINGS FOR COORDINATION OF ALL DIMENSIONS.
2. REFER TO SHEET S1.0 TO S1.03 FOR STRUCTURAL NOTES.
3. ALL EXPOSED STEEL ON EXTERIOR DECK IS HOT DIPPED GALVANIZED OR COATED TO APPROVED FINISH.
4. U.N.O ALL MEMBERS SHOWN ARE NEW.
5. PILES TO BE 8"Ø TIP & 12"Ø BUTT TIMBER (20 KIPS DESIGN CAPACITY). SEE SOILS REPORT, SITE PREPARATION, PILE INSTALLATION, PILE TESTING. ETC. TO BE IN STRICT CONFORMANCE WITH THE SOILS REPORT.
6. CONTRACTOR TO RETAIN GEOTECHNICAL ENGINEER TO TEST PILE INSTALLATION AND VERIFY DESIGN ASSUMPTIONS AND CAPACITIES HAVE BEEN MET.

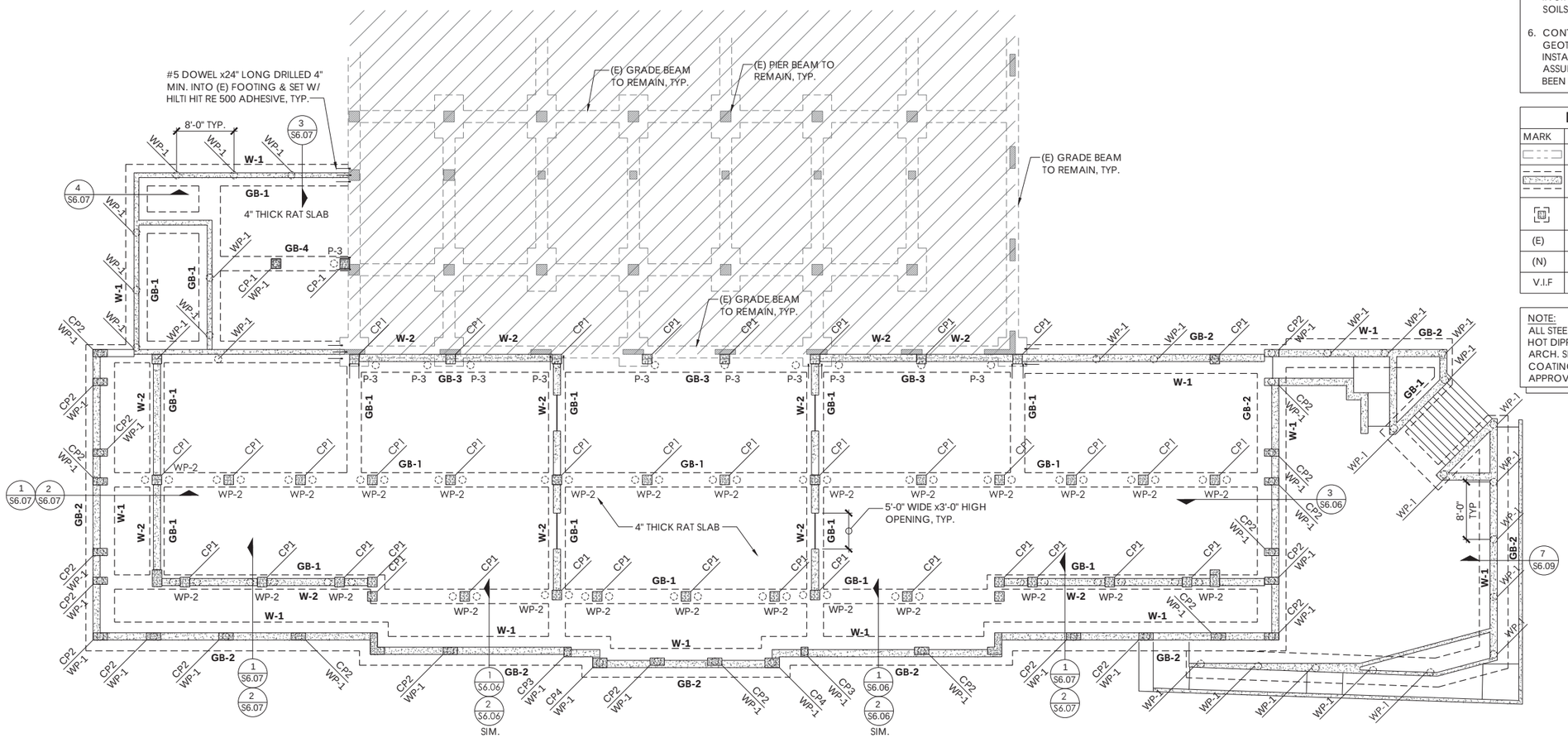

PROPOSED FOUNDATION PLAN

SCALE: 1/8"=1'-0"

N

NOTE:
ALL STEEL EXPOSED TO WEATHER SHALL BE HOT DIPPED GALVANIZED & PAINTED TO ARCH. SPECIFICATION, ALTERNATE COATINGS SHALL BE SUBMITTED FOR APPROVAL.

DRAWING LEGEND

MARK	DESCRIPTION
	(E) CMU WALL TO REMAIN
	(N) CONCRETE WALL W/ FOOTING
	(N) CONCRETE PIER W/ FOOTING
(E)	EXISTING
(N)	NEW
V.I.F	VERIFY IN FIELD

PILE SCHEDULE

MARK	DESCRIPTION
WP-1	(1) 12"Ø WOODEN PILE W/ 8"Ø TIP & 12"Ø BUTT
WP-2	(2) 12"Ø WOODEN PILE W/ 8"Ø TIP & 12"Ø BUTT
P-3	MICROPILES OR OTHER APPROVED PILE W/ CAPACITY OF 20K

CONCRETE WALL SCHEDULE

MARK	DESCRIPTION
W-1	12" THICK CONCRETE WALL W/ (2) LAYERS OF #5 BAR @ 18" O.C. EACH WAY
W-2	12" THICK CONCRETE SHEAR WALL FULL HEIGHT (GRADE BEAM TO DECK BEARING) W/ (2) LAYERS OF #5 BAR @ 18" O.C. EACH WAY

CONCRETE PIER SCHEDULE

MARK	DESCRIPTION
CP-1	1'-4" x 1'-4" CONCRETE PIER W/ (4) #5 VERTICAL REBAR & #3 TIES @ 8" O.C.
CP-2	2'-0" x 1'-0" CONCRETE PIER W/ (4) #5 VERTICAL REBAR & #3 TIES @ 8" O.C.

GRADE BEAM SCHEDULE

MARK	DESCRIPTION
GB-1	2'-6" WIDE x 2'-0" THICK W/ (3) #5 TOP & BOTTOM BARS W/ #3 TIES @ 8" O.C. BETWEEN PILES
GB-2	4'-0" WIDE x 2'-0" THICK W/ (3) #5 TOP & BOTTOM BARS W/ #3 TIES @ 8" O.C. BETWEEN PILES
GB-3	2'-6" WIDE x 2'-0" THICK W/ (3) #5 TOP & BOTTOM BARS W/ #3 TIES @ 8" O.C. BETWEEN PILES (INSTALLED ADJACENT TO EXISTING GRADE BEAMS)

Strucutal Innovations, LLC
1011 Bay Street, Suite 306
Beaufort, South Carolina 29902
www.structuralInnovationsllc.com
ph. 843.441.9828 email:arichardson@structural.innovations llc.com

SOUTH CAROLINA STRUCTURAL INNOVATIONS, LLC No. 3686 CERTIFICATE OF AUTHORIZATION

No.	REVISIONS	BY	DATE

WESTIN HILTON HEAD ISLAND RESORT AND SPA EXPANSION
TOWN OF HILTON HEAD ISLAND, SC

PROPOSED FOUNDATION PLAN

SOUTH CAROLINA PROFESSIONAL ENGINEER No. 22824 PHILIP ANDREW RICHARDSON

DATE 09/12/16
SCALE AS SHOWN
PROJECT NO 16-0**

Sheet No.
S2.00

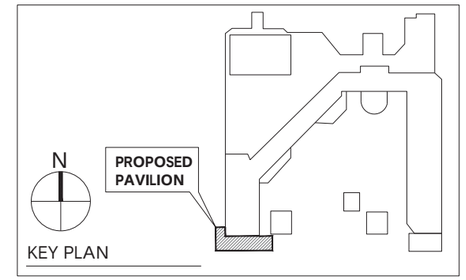

KEY PLAN

NOTES:

1. REFER TO ARCH. DRAWINGS FOR COORDINATION OF ALL DIMENSIONS.
2. REFER TO SHEET S1.0 TO S1.03 FOR STRUCTURAL NOTES.
3. ALL EXPOSED STEEL ON EXTERIOR DECK IS HOT DIPPED GALVANIZED.
4. U.N.O ALL MEMBERS SHOWN ARE NEW.
5. ALL GIRDERS SHALL HAVE ⅝"Ø x3.5" LONG STUDS (TOTAL 9)

DRAWING LEGEND

MARK	DESCRIPTION
	(E) CMU WALL TO REMAIN
	(N) CONCRETE WALL
	FLOOR JOISTS
	BEAM / HEADER
X	INDICATES LATERAL STRAP "X" BRACING SEE REF. DETAIL 9/S6.02
	EXTERIOR DECK AREA
	FRAME O/ FRAME
(E)	EXISTING
(N)	NEW
V.I.F	VERIFY IN FIELD

NOTE:
ALL STEEL EXPOSED TO WEATHER SHALL BE HOT DIPPED GALVANIZED & PAINTED TO ARCH. SPECIFICATION, ALTERNATE COATINGS SHALL BE SUBMITTED FOR APPROVAL.

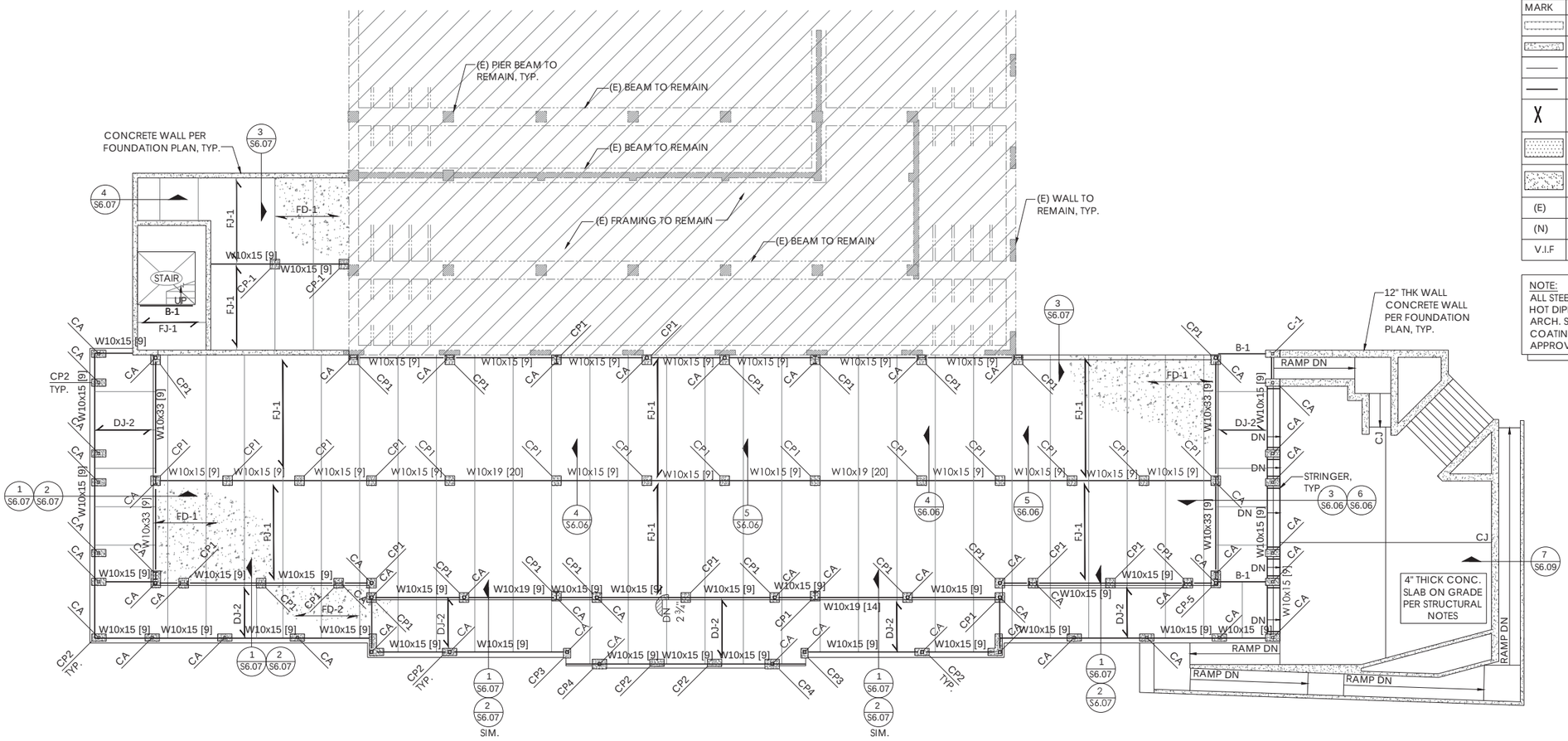

PROPOSED FIRST FLOOR FRAMING PLAN

SCALE: 1/8"=1'-0"

JOIST LEGEND

MARK	DESCRIPTION
FJ-1	W10x15 FLOOR JOISTS @ 5'-4" O.C. W/ ⅝"Ø x3.5" LONG STUDS (TOTAL 9)
DJ-2	W10x15 DECK JOISTS @ 5'-4" O.C. W/ ⅝"Ø x3.5" LONG STUDS (TOTAL 9)

METAL DECK SCHEDULE

MARK	DESCRIPTION
FD-1	2 VLI18 COMPOSITE DECK W/ 4½" (TOTAL) CONCRETE W/ 6x6 W1.4xW.14 WWF, FASTENERS PATTERN SHALL BE 36/4/1 AS FOLLOWS: * END LAPS: (4) 3/4" ARC SPOT WELDS (E.G. PUDDLE WELDS PER 36" WIDE SHEET * SIDE LAPS: (1) #12-24 x 3/4" LONG FASTENERS PER SPAN * LIMIT CONCRETE POURS TO 1,000 FT. SQUARES. PROVIDE REINFORCEMENT IN SLAB OF #4 BARS SPACED 2'-0" O.C. AND WITH 1" OF COVER BELOW SURFACE
FD-2	2 VLI18 COMPOSITE DECK W/ 4½" (TOTAL) CONCRETE W/ 6x6 W1.4xW.14 WWF W/ G90 FINISH & APPROVED PAINTED COATING, FASTENERS PATTERN SHALL BE 36/4/1 AS FOLLOWS: * END LAPS: (4) 3/4" ARC SPOT WELDS (E.G. PUDDLE WELDS PER 36" WIDE SHEET * SIDE LAPS: (1) #12-24 x 3/4" LONG FASTENERS PER SPAN * LIMIT CONCRETE POURS TO 1,000 FT. SQUARES. PROVIDE REINFORCEMENT IN SLAB OF #4 BARS SPACED 2'-0" O.C. AND WITH 1" OF COVER BELOW SURFACE

Strucutal Innovations, LLC
1011 Bay Street, Suite 306
Beaufort, South Carolina 29902
www.structuralInnovationsllc.com
ph. 843.441.9828 email:arichardson@structural innovations llc.com

SOUTH CAROLINA STRUCTURAL INNOVATIONS, LLC No. 3686 CERTIFICATE OF AUTHORIZATION

No.	REVISIONS	BY	DATE

WESTIN HILTON HEAD ISLAND RESORT AND SPA EXPANSION
TOWN OF HILTON HEAD ISLAND, SC

PROPOSED FIRST FLOOR FRAMING PLAN

SOUTH CAROLINA REGISTERED PROFESSIONAL ENGINEER No. 22824 PHILIP ANDREW RICHARDSON

DATE	09/12/16
SCALE	AS SHOWN
PROJECT NO	16-0**

Sheet No.
S3.00

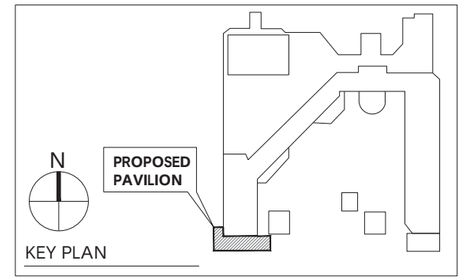

NOTES:

1. REFER TO ARCH. DRAWINGS FOR COORDINATION OF ALL DIMENSIONS.
2. U.N.O ALL MEMBERS SHOWN ARE NEW.

DRAWING LEGEND

MARK	DESCRIPTION
	(E) WALL TO REMAIN
	(N) METAL STUD WALL
	ROOF RAFTER
	BEAM / HEADER
X	INDICATES LATERAL STRAP "X" BRACING SEE REF. DETAIL 9/S6.02
	EXTERIOR DECK AREA
	FRAME O/ FRAME
(E)	EXISTING
(N)	NEW
V.I.F	VERIFY IN FIELD

NOTE:
ALL STEEL EXPOSED TO WEATHER SHALL BE HOT DIPPED GALVANIZED & PAINTED TO ARCH. SPECIFICATION, ALTERNATE COATINGS SHALL BE SUBMITTED FOR APPROVAL.

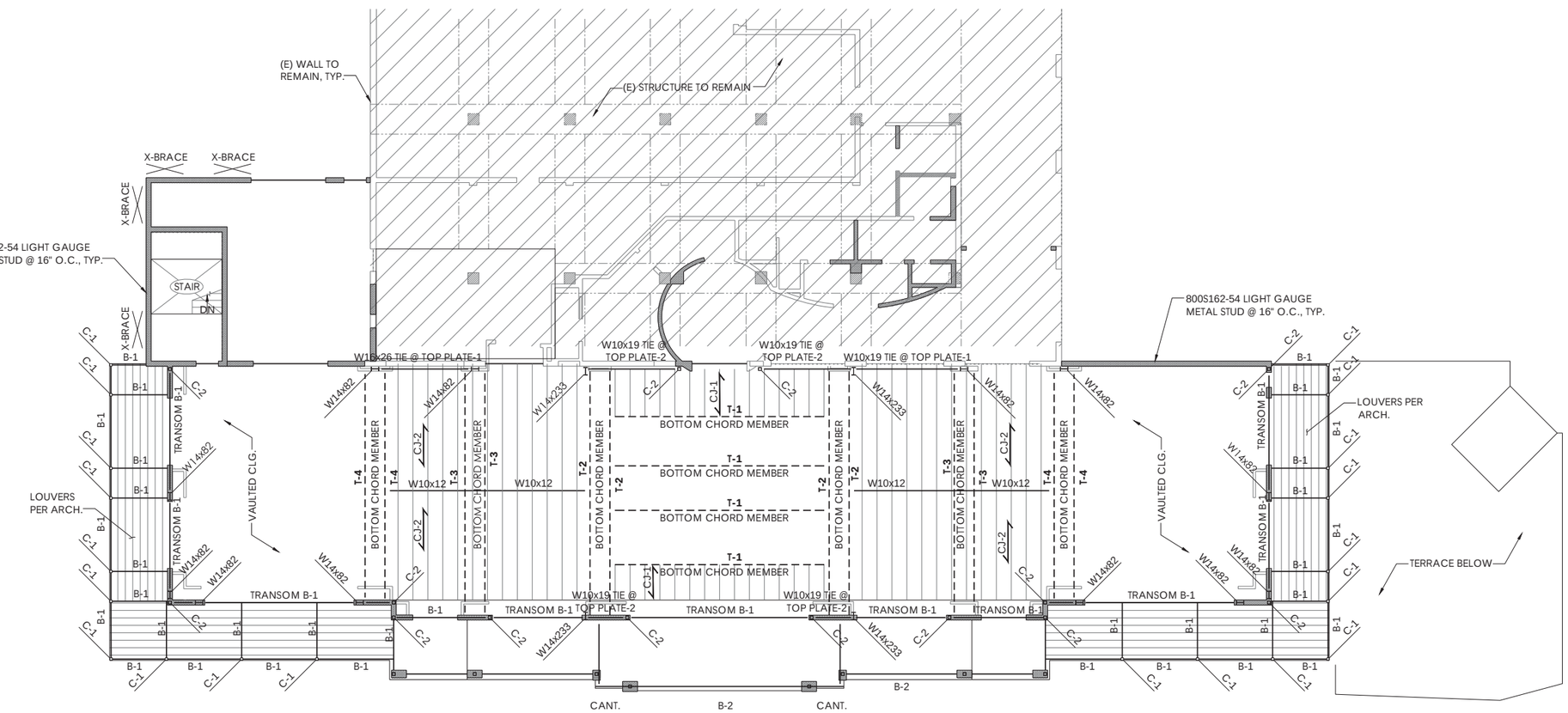

PROPOSED TRELLIS & CEILING FRAMING PLAN

SCALE: 1/8"=1'-0"

N

TRELLIS BEAM LEGEND	
MARK	DESCRIPTION
B-1	HSS 6x4x3/4"
TRANSOM B-1	HSS 8x6x3/8"

JOIST LEGEND	
MARK	DESCRIPTION
CJ-1	1000S162-54 RAFTERS (50 KSI) SPACED @ 2'-0" O.C.
CJ-2	1000S162-54 RAFTERS (50 KSI) SPACED @ 2'-0" O.C.

HEADER LEGEND			
MARK	DESCRIPTION	JAMB STUD	JACK STUD
H-1	2-800S162-54 (50 KSI) BOX HEADER W/ 2-800T125-43 T&B TRACK	2-800S162-54 (50 KSI)	800S162-54
H-2	2-800S162-68 (50 KSI) BOX HEADER W/ 2-800T125-54 T&B TRACK	2-800S162-58 (50 KSI)	800S162-54

* ALL HEADER ARE H-1 U.N.O.

COLUMN LEGEND	
MARK	DESCRIPTION
C-1	HSS 4x4x3/4" THICK COLUMN
C-2	HSS 5x5x3/4" THICK COLUMN

Strucutal Innovations, LLC
1011 Bay Street, Suite 306
Beaufort, South Carolina 29902
www.structuralInnovationsllc.com
ph. 843.441.9828 email:arichardson@structural innovations llc.com

SOUTH CAROLINA STRUCTURAL INNOVATIONS, LLC No. 3686 CERTIFICATE OF AUTHORIZATION

No.	REVISIONS	BY	DATE

WESTIN HILTON HEAD ISLAND RESORT AND SPA EXPANSION
TOWN OF HILTON HEAD ISLAND, SC

PROPOSED TRELLIS & CEILING FRMG. PLAN

SOUTH CAROLINA PROFESSIONAL ENGINEER No. 22824 PHILIP ANDREW RICHARDSON

DATE	09/12/16
SCALE	AS SHOWN
PROJECT NO	16-0**

Sheet No.
S4.00

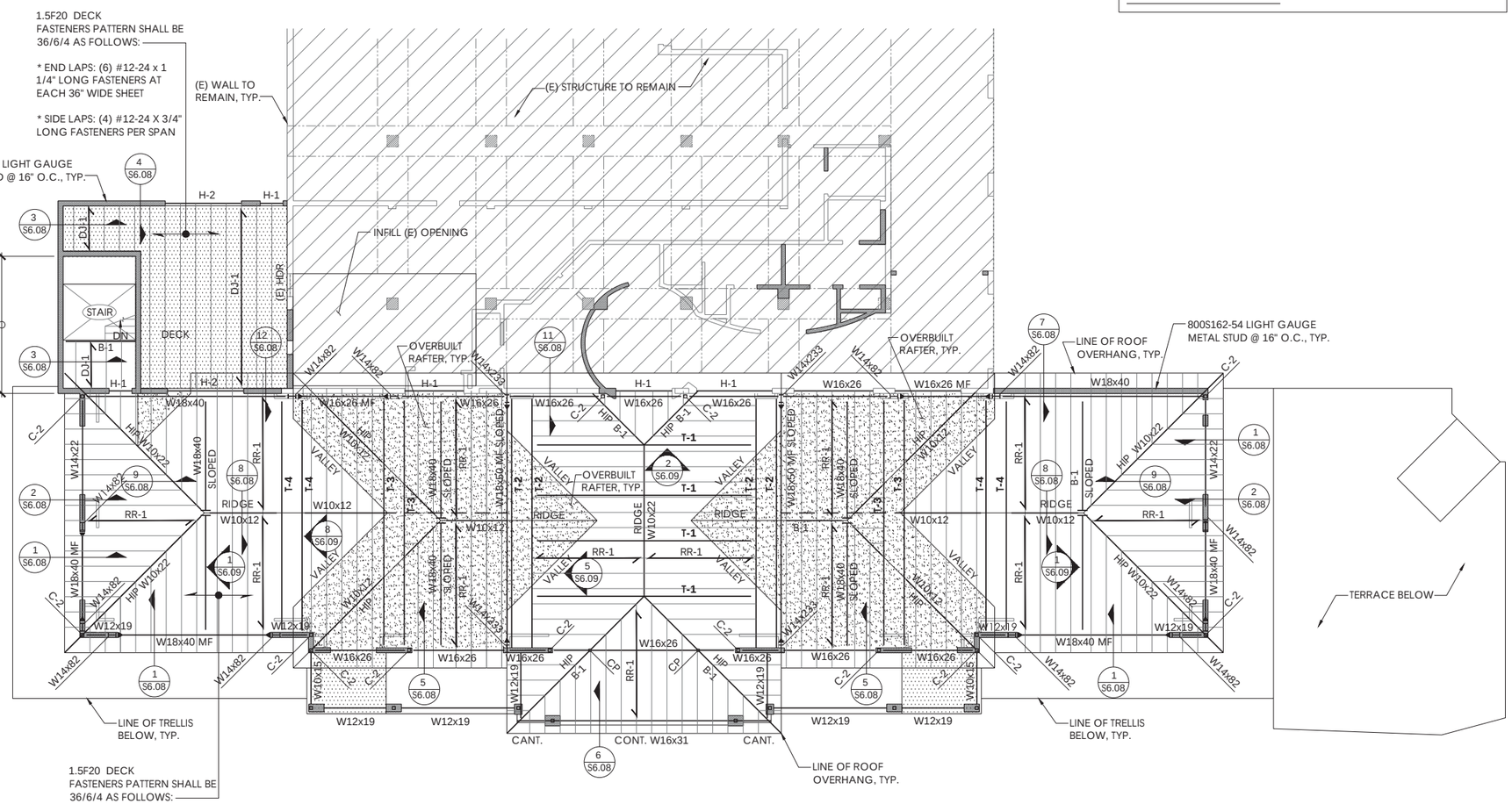

PROPOSED ROOF FRAMING PLAN

SCALE: 1/8"=1'-0"

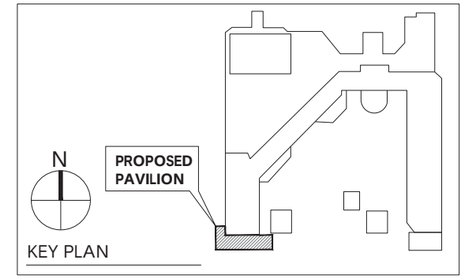

NOTES:

1. REFER TO ARCH. DRAWINGS FOR COORDINATION OF ALL DIMENSIONS.
2. U.N.O ALL MEMBERS SHOWN ARE NEW.
3. CONNECTIONS ARE TO BE DESIGNED AND SEALED BY THE FABRICATOR'S SPECIALTY ENGINEER.

DRAWING LEGEND

MARK	DESCRIPTION
	(E) WALL TO REMAIN
	(N) METAL STUD WALL
	ROOF RAFTER
	BEAM / HEADER
X	INDICATES LATERAL STRAP "X" BRACING SEE REF. DETAIL 9/S6.02
	EXTERIOR DECK AREA
	FRAME O/ FRAME
(E)	EXISTING
(N)	NEW
V.I.F	VERIFY IN FIELD

NOTE:
ALL STEEL EXPOSED TO WEATHER SHALL BE HOT DIPPED GALVANIZED & PAINTED TO ARCH. SPECIFICATION, ALTERNATE COATINGS SHALL BE SUBMITTED FOR APPROVAL.

JOIST LEGEND

MARK	DESCRIPTION
RR-1	1000S162-54 RAFTERS (50 KSI) SPACED @ 2'-0" O.C.
DJ-1	14K3 OPEN WEB STEEL JOISTS @ 2'-8" O.C., PROVIDE BRIDGING PER MFR.

HEADER LEGEND

MARK	DESCRIPTION	JAMB STUD	JACK STUD
H-1	2-800S162-54 (50 KSI) BOX HEADER W/ 2-800T125-43 T&B TRACK	2-800S162-54 (50 KSI)	800S162-54
H-2	2-800S162-68 (50 KSI) BOX HEADER W/ 2-800T125-54 T&B TRACK	2-800S162-58 (50 KSI)	800S162-54

* ALL HEADER ARE H-1 U.N.O.

COLUMN LEGEND

MARK	DESCRIPTION
C-1	HSS 4x4x¼" THICK COLUMN
C-2	HSS 5x5x¼" THICK COLUMN

Strucutal Innovations, LLC
1011 Bay Street, Suite 306
Beaufort, South Carolina 29902
www.structuralInnovationsllc.com
ph. 843.441.9828 email:arichardson@structural.innovations llc.com

SOUTH CAROLINA STRUCTURAL INNOVATIONS, LLC No. 3686 CERTIFICATE OF AUTHORIZATION

No.	REVISIONS	BY	DATE

WESTIN HILTON HEAD ISLAND RESORT AND SPA EXPANSION
TOWN OF HILTON HEAD ISLAND, SC

PROPOSED ROOF FRAMING PLAN

SOUTH CAROLINA PROFESSIONAL ENGINEER No. 22824 PHILIP ANDREW RICHARDSON

DATE 09/12/16
SCALE AS SHOWN
PROJECT NO 16-0**

Sheet No.
S5.00

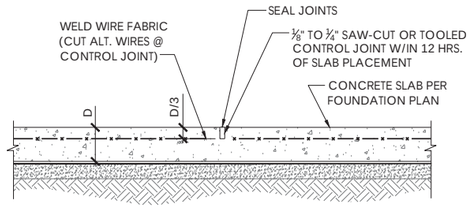

1 TYPICAL CONTROL JOINT DETAIL (LIGHT DUTY) SCALE: ¾"=1'-0"

2 NOT USED

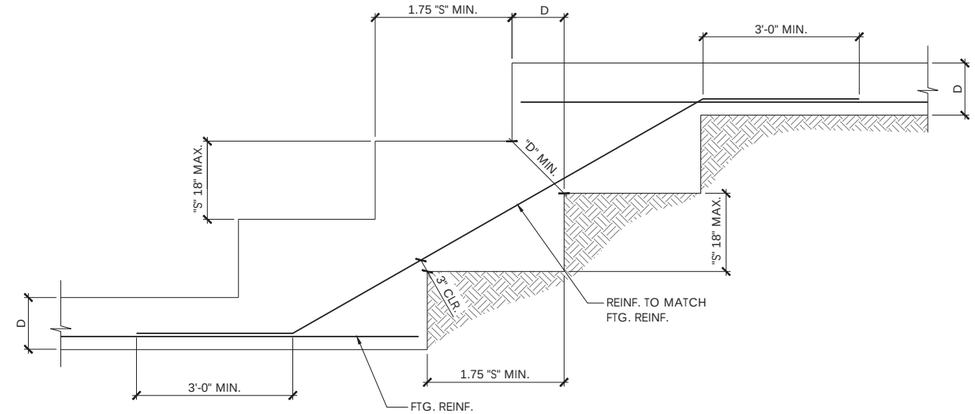

3 TYPICAL DETAIL @ STEPPED FOOTING SCALE: ¾"=1'-0"

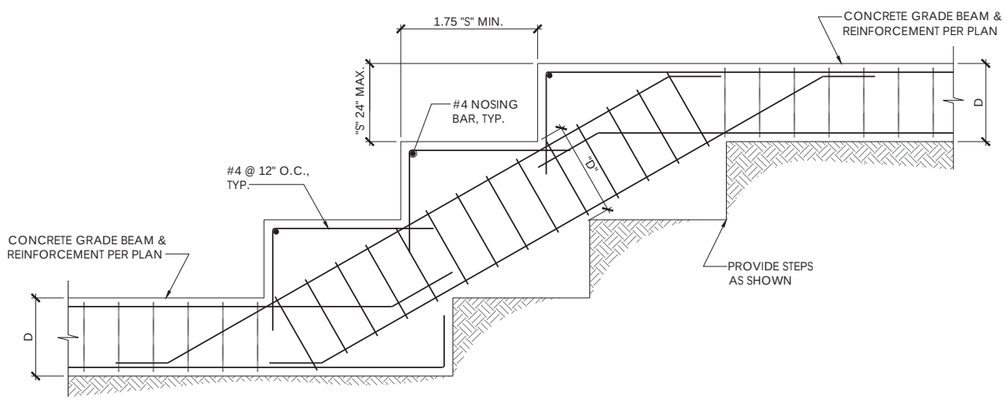

4 TYPICAL DETAIL @ STEPPED GRADE BEAM SCALE: ¾"=1'-0"

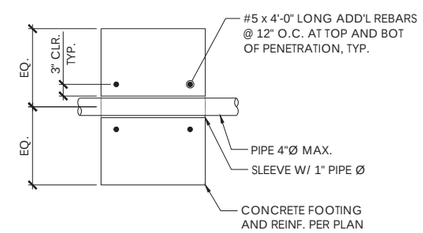

5 DETAIL @ PIPE THRU FOOTING SCALE: ¾"=1'-0"

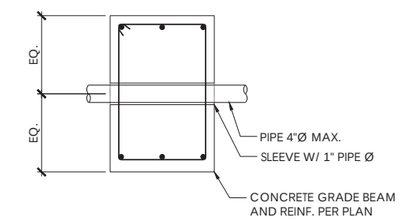

6 DETAIL @ PIPE THRU GRADE BEAM SCALE: ¾"=1'-0"

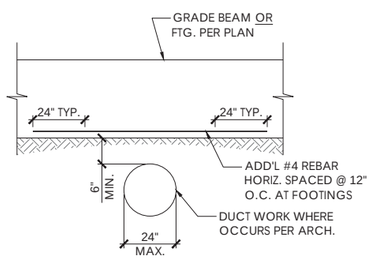

NOTES:

1. NO LOADS FROM ABOVE ON DUCT.
2. CONTRACTOR TO PROTECT DUCTWORK FROM FOOTING SETTLEMENT.

7 TYPICAL DUCT BELOW FTG. OR GRADE BEAM SCALE: ¾"=1'-0"

NOTE:
WHERE REINFORCING IS NOT SHOWN OTHERWISE ON SECTIONS, DETAILS OR WALL ELEVATIONS.

MIN. REINF. IN CONCRETE WALLS

WALL THICKNESS "T"	REINF. EACH WAY	OPENING REINF.
6"	#4 @ 12" @ C.L	1-#5
8"	#4 @ 10" @ C.L	2-#5
10"	#4 @ 16" @ E.F	2-#6
12"	#4 @ 12" @ E.F	2-#6

NOTES:

1. FOR PLACEMENT OF VERTICAL BARS RELATIVE TO HORIZONTAL BARS, SEE REINFORCING NOTES IN GENERAL NOTES.
2. MAXIMUM OPENING 8'-0".

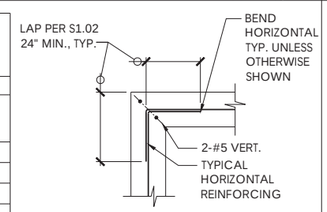

CORNER DETAIL

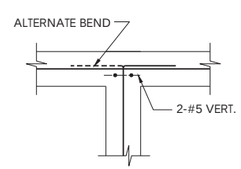

INTERSECTION DETAIL

NOTE:
SEE SECTIONS FOR WALL REINF.

8 TYPICAL DETAIL @ CONCRETE WALL SCALE: ¾"=1'-0"

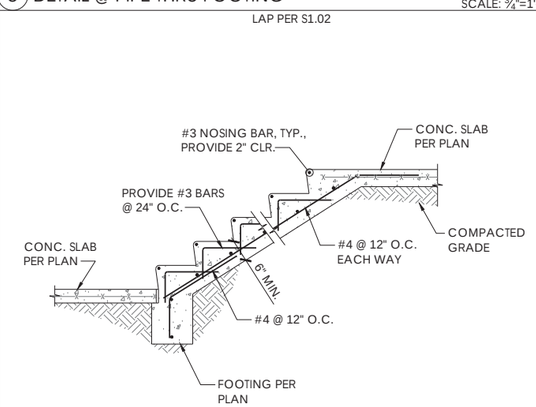

9 TYPICAL DETAIL @ CONCRETE STAIR SCALE: ¾"=1'-0"

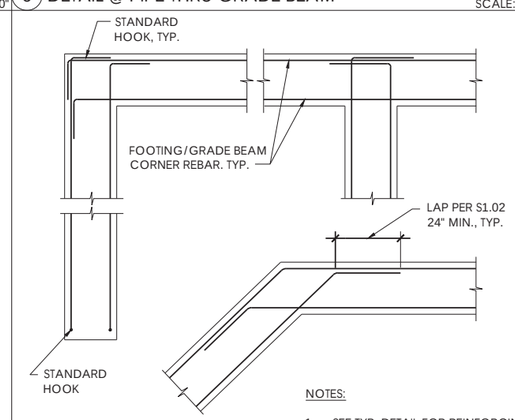

PLAN

NOTES:

1. SEE TYP. DETAIL FOR REINFORCING IN STEM WALL
2. ONLY CORNER REBAR SHOWN ON THIS DETAIL. TERMINATE REMAINING REBAR WITH STANDARD HOOK

10 FOOTING & GRADE BEAM REINF. @ CORNERS SCALE: ¾"=1'-0"

Strucutal Innovations, LLC
1011 Bay Street, Suite 306
Beaufort, South Carolina 29902
www.structuralInnovationsllc.com
ph. 843.441.9828 email:arichardson@structural.innovations llc.com

SOUTH CAROLINA STRUCTURAL INNOVATIONS, LLC No. 3686 CERTIFICATE OF AUTHORIZATION

No.	REVISIONS	BY	DATE

WESTIN HILTON HEAD ISLAND
RESORT AND SPA EXPANSION
TOWN OF HILTON HEAD ISLAND, SC

DETAILS

SOUTH CAROLINA REGISTERED PROFESSIONAL ENGINEER No. 22824 PHILIP ANDREW RICHARDSON

DATE	09/12/16
SCALE	AS SHOWN
PROJECT NO	16-0**

Sheet No.
S6.01

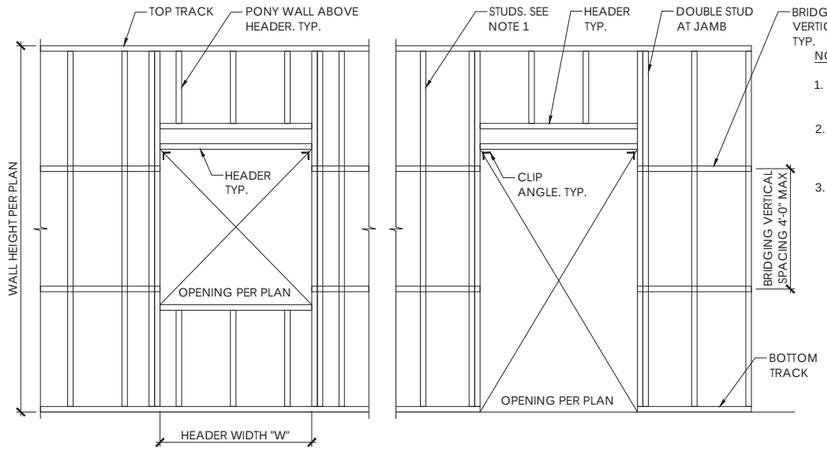

BRIDGING. PROVIDE @ THIRD POINT OR 4'-0" MAX VERTICAL SPACING, WHICHEVER IS MORE STRINGENT, TYP.

NOTES

1. FOR STUD SIZE, SPACING AND GAUGE SEE PLANS.
2. UNLESS OTHERWISE NOTED ALL THE FRAMING MEMBERS SHALL HAVE THE SAME DEPT AND GAUGE OF THE STUDS.
3. FASTENERS CONNECTING LIGHT GAUGE MEMBERS TO LIGHT GAUGE OR STRUCTURAL STEEL MEMBERS SHALL SELF DRILLING AND SELF TAPPING SIMPSON "QUICK DRIVE" SHEET METAL SCREWS (SMS).

PROVIDE SMS SCREWS ACCORDING TO THE THICKNESS OF THE CONNECTING MEMBERS AS FOLLOWS:

A. # 8 SMS FOR THICKN. UP TO 18 GAUGE.
B. #10 SMS FOR THICKN. UP TO 16 GAUGE.
C. #12 SMS FOR THICKN. EXCEEDING 16 GAUGE.
D. #12 x SCREWS FOR CONNECTION TO STRUCTURAL STEEL.

PROVIDE A MIN ½" EDGE DISTANCE FOR ALL THE FASTENERS.

1 TYPICAL LIGHT GAUGE WALL ASSEMBLY

SCALE: ¾"=1'-0"

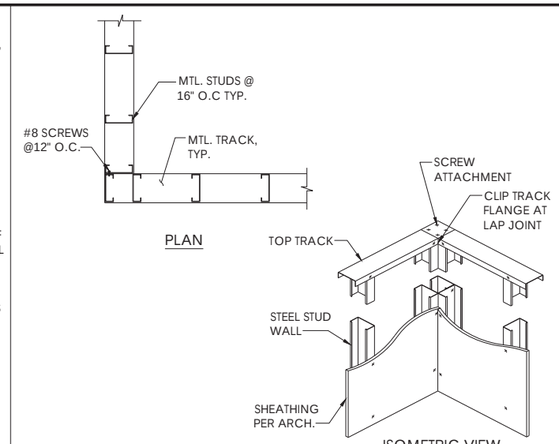

2 TYPICAL WALL FRAMING @ CORNER TRACK CONN.

SCALE: ¾"=1'-0"

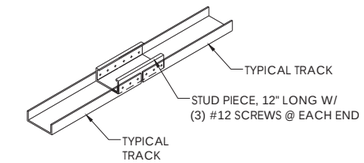

3 TYPICAL TRACK SPLICE CONNECTION

SCALE: ¾"=1'-0"

	OPENING WIDTH	HEADER REQUIRED	FULL HEIGHT STUDS
12 FOOT WALL HEIGHTS STUDS: 600S200-43 @ 16" O.C.	< 4 FT.	(2) 6" X 18 GA STUDS W/ (2) 600T200-54 16 GA TRACKS	(2) STUDS MIN. EACH END
	< 7 FT.	(2) 6" X 18 GA STUDS W/ (2) 600T200-54 16 GA TRACKS	(3) STUDS MIN. EACH END
	< 14 FT.	HSS6x6x1/4"	HSS6x6x1/4" EACH END
	< 21 FT.	HSS6x6x1/4"	HSS6x6x1/4" EACH END

	OPENING WIDTH	HEADER REQUIRED	FULL HEIGHT STUDS
18 FOOT MAX. WALL HEIGHTS STUDS: 600S200-54 @ 12" O.C.	< 5 FT.	(2) 6" X 18 GA STUDS W/ (2) 600T200-54 16 GA TRACKS	(3) STUDS MIN. EACH END
	< 8 FT.	(2) 6" X 18 GA STUDS W/ (2) 600T200-54 16 GA TRACKS	(4) STUDS MIN. EACH END

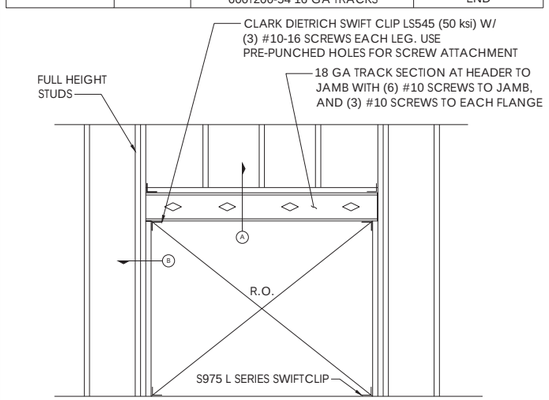

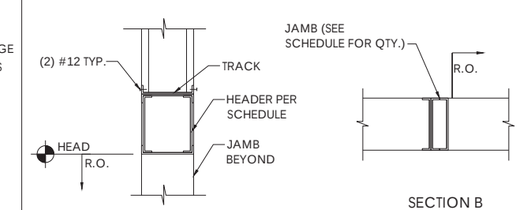

SECTION A
HEAD

SECTION B
JAMB

12 CURTAIN WALL FRAMING AND HEADERS

SCALE: ¾"=1'-0"

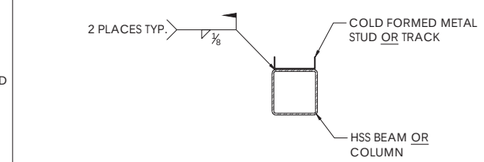

7 TYPICAL STUD OR TRACK TO TUBE CONNECTION DETAIL

SCALE: ¾"=1'-0"

NOTE:
HSS SIZES CALLED OUT ON THE PLAN SHALL GOVERN. FOR CONNECTION OF THE HSS JAMB, COLUMN TO BEAM AND SLAB, SEE TYPICAL CONNECTION DETAILS AND NOTES

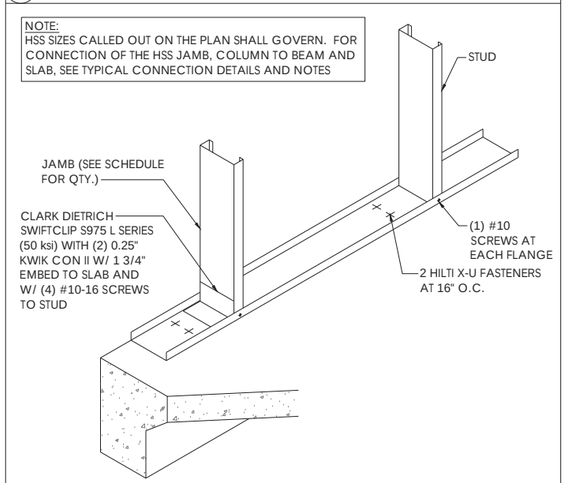

11 METAL STUD CONNECTORS

SCALE: ¾"=1'-0"

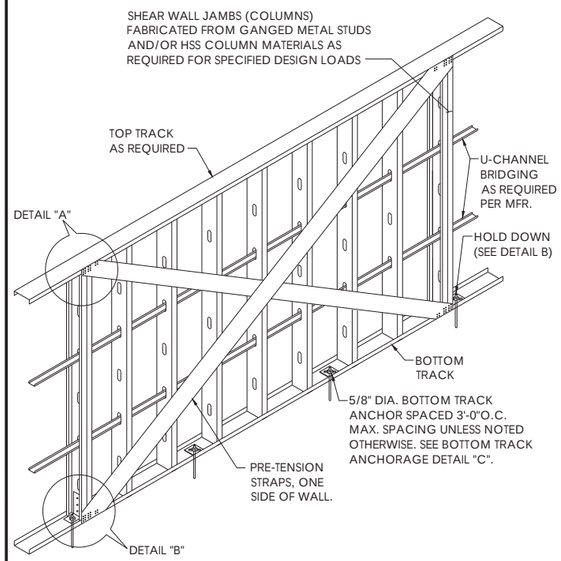

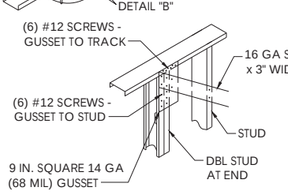

X-BRACING DETAIL "A"

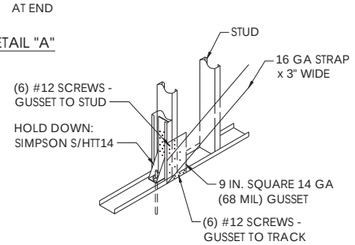

X-BRACING DETAIL "B"

9 TYPICAL X-BRACE SHEAR WALL DETAIL

SCALE: ¾"=1'-0"

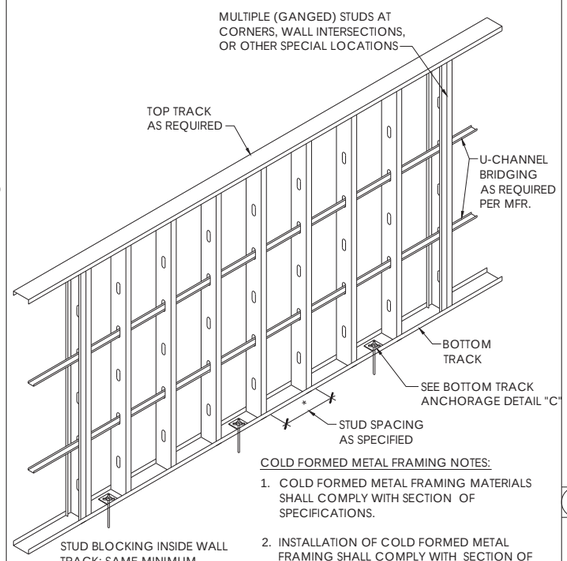

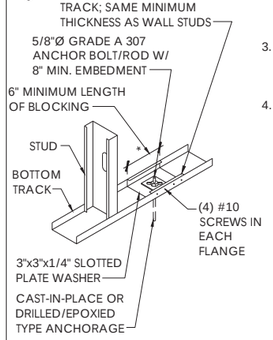

BOTTOM TRACK ANCHORAGE DETAIL "C"

COLD FORMED METAL FRAMING NOTES:

1. COLD FORMED METAL FRAMING MATERIALS SHALL COMPLY WITH SECTION OF SPECIFICATIONS.
2. INSTALLATION OF COLD FORMED METAL FRAMING SHALL COMPLY WITH SECTION OF SPECIFICATIONS.
3. TENSION STRAP (FOR SHEAR WALLS) SHALL BE PRE-TENSIONED SO THAT LATERAL LOAD IS IMMEDIATELY TRANSFERRED TO X-BRACING.
4. ALL COLD FORMED METAL FRAMING DESIGNS REQUIRED OF THE GENERAL CONTRACTOR SHALL BE PREPARED, SIGNED AND SEALED BY A REGISTERED PROFESSIONAL ENGINEER LICENSED IN THE STATE OF SOUTH CAROLINA. AT CONTRACTOR'S OPTION, IN LIEU OF PROVIDING SIGNED/SEALED FRAMING DESIGN, PROVIDE THE COLD FORMED METAL FRAMING PROPERTIES AS FOLLOWS:

WALL TYPE	MIN. GAGE	MAX SPACING
LOAD BEARING	18	16"
PIPE CHASE	18	16"
INTER NON-LOAD BEARING	20	16"
EXTERIOR NON-LOAD BEARING	18	16"

5. THE COLD FORMED METAL FRAMING MANUFACTURER SHALL VERIFY THE ADEQUACY OF THE BRACING REQUIREMENTS SHOWN ON THE CONTRACT DOCUMENTS AND SUBMITTED SHOP DRAWINGS.

10 TYPICAL STANDARD WALL SECTION

SCALE: ¾"=1'-0"

Strucutal Innovations, LLC
1011 Bay Street, Suite 306
Beaufort, South Carolina 29902
www.structuralinnovationsllc.com
ph. 843.441.9828 email:arichardson@structural innovations llc.com

SOUTH CAROLINA STRUCTURAL INNOVATIONS, LLC No. 3686 CERTIFICATE OF AUTHORIZATION

No.	REVISIONS	BY	DATE

WESTIN HILTON HEAD ISLAND RESORT AND SPA EXPANSION
TOWN OF HILTON HEAD ISLAND, SC

DETAILS

SOUTH CAROLINA REGISTERED PROFESSIONAL ENGINEER No. 22824 PHILIP ANDREW RICHARDSON

DATE	09/12/16
SCALE	AS SHOWN
PROJECT NO	16-0**

Sheet No.
S6.02

SIZE	CONNECTION		WELD "E"	REMARKS
	PLATE "t"	BOLTS		
W6	3/8"	2-5/8"Ø	5/16"	
W8, W10	3/8"	2-3/4"Ø	5/16"	
W12, C12	3/8"	3-3/4"Ø	5/16"	
W14	3/8"	3-3/4"Ø	5/16"	
W16, W18	1/2"	5-3/4"Ø	5/16"	
W21	1/2"	5-3/4"Ø	5/16"	
W24	1/2"	7-3/4"Ø	5/16"	
W27	1/2"	7-3/4"Ø	5/16"	

NOTES:
1. USE A325-N BOLTS UON.
2. USE PLATE - Fy=36 ksi Fu=58 ksi
3. USE STANDARD HOLES HORIZONTAL HOLES AT ALL BEAM TO BEAM AND BEAM TO COLUMN CONNECTIONS.

1 BEAM CONNECTION SCHEDULE — SCALE: 3/4"=1'-0"

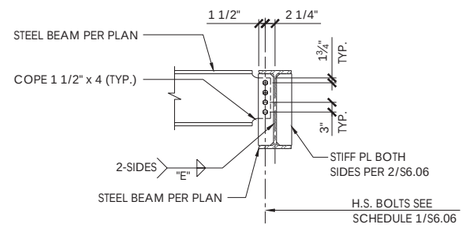

ONE SIDED

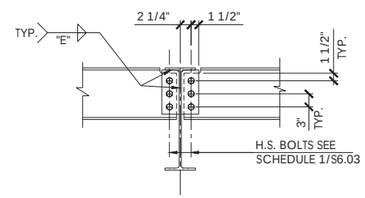

EQUAL DEPTH

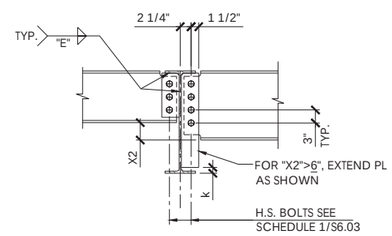

UNEQUAL DEPTH

2 TYPICAL BEAM WEB STIFFENER DETAIL — SCALE: 3/4"=1'-0"

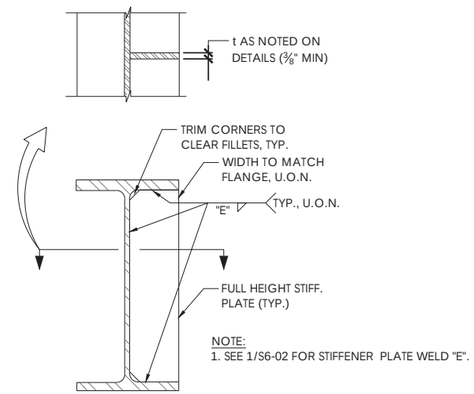

NOTE:
1. SEE 1/S6-02 FOR STIFFENER PLATE WELD "E".

SECTION

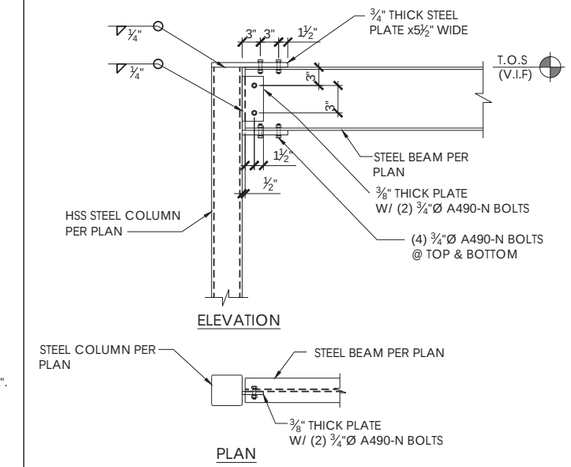

ELEVATION

PLAN

3 DETAIL @ MOMENT CONN. (HSS) — SCALE: 3/4"=1'-0"

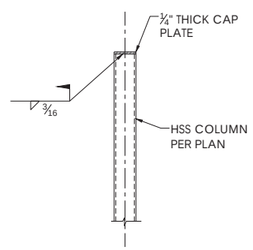

4 TYPICAL TUBE COLUMN CAP PLATE DETAIL — SCALE: 3/4"=1'-0"

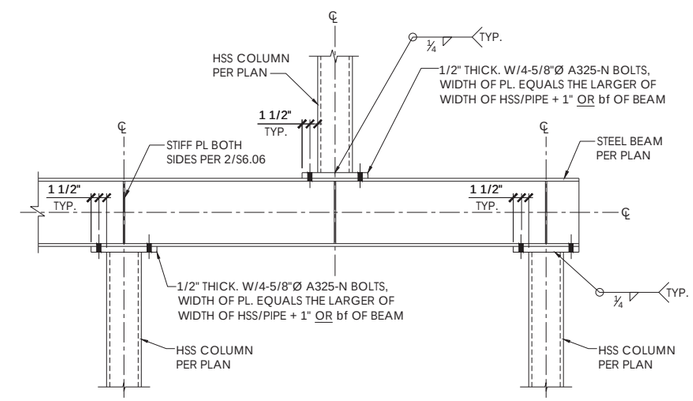

TYP. FIELD CONDITION

TYP. END CONDITION

5 TYPICAL BEAM TO BEAM OR BEAM TO GIRDER — SCALE: 3/4"=1'-0"

6 TYPICAL HSS COLUMN TO Wx BEAM CONNECTIONS — SCALE: 3/4"=1'-0"

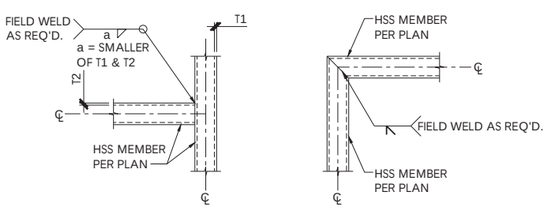

"T" CONDITIONS

CORNER CONDITIONS

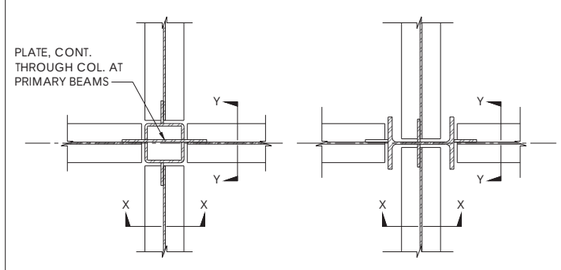

PLAN HSS COLUMN

PLAN W COLUMN

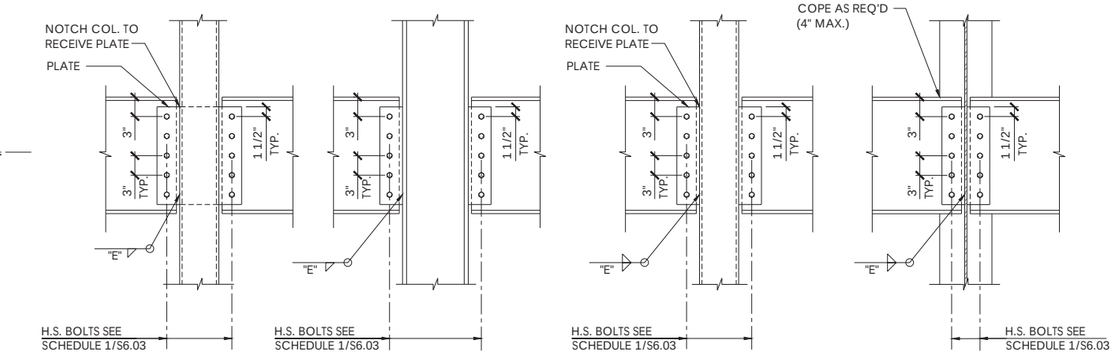

SECTION X-X HSS COLUMN

SECTION X-X W COLUMN

SECTION Y-Y HSS COLUMN

SECTION Y-Y W COLUMN

7 TYPICAL HSS MEMBER CONNECTION — SCALE: 3/4"=1'-0"

8 TYPICAL BEAM /COLUMN CONNECTION — SCALE: 3/4"=1'-0"

Strucutal Innovations, LLC
1011 Bay Street, Suite 306
Beaufort, South Carolina 29902
www.structuralinnovationsllc.com
ph. 843.441.9828 email:arichardson@structural.innovations llc.com

SOUTH CAROLINA STRUCTURAL INNOVATIONS, LLC No. 3686 CERTIFICATE OF AUTHORIZATION

No.	REVISIONS	BY	DATE

WESTIN HILTON HEAD ISLAND RESORT AND SPA EXPANSION
TOWN OF HILTON HEAD ISLAND, SC

DETAILS

SOUTH CAROLINA REGISTERED PROFESSIONAL ENGINEER No. 22824 PHILIP ANDREW RICHARDSON

DATE	09/12/16
SCALE	AS SHOWN
PROJECT NO	16-0**

Sheet No.
S6.03

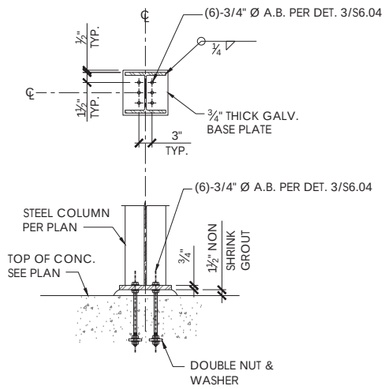

1 TYPICAL Wx BASE PLATE DETAIL

SCALE: 3/4"=1'-0"

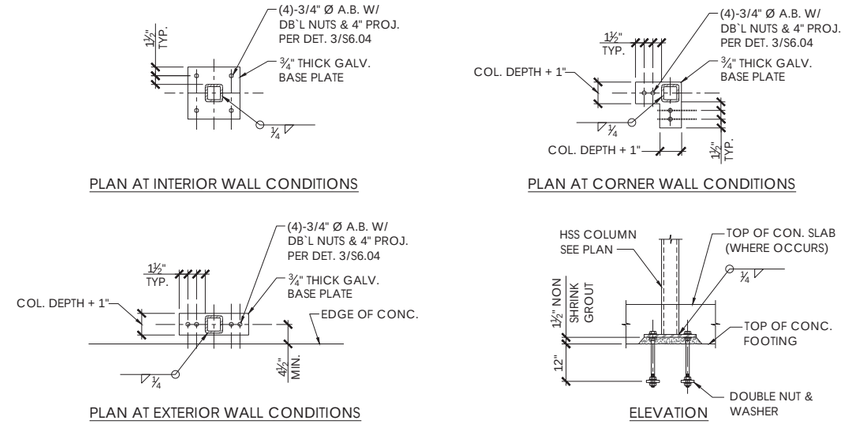

2 TYPICAL HSS COLUMN BASE PLATE DETAIL

SCALE: 3/4"=1'-0"

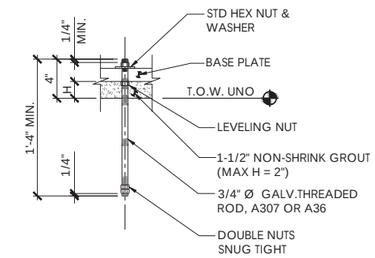

NOTES:

1. EDGES OF GROUT SHALL EXTEND A DISTANCE H PAST EDGES OF BASE PLATE.
2. BASE PLATE BOLT HOLES SHALL BE "OVERSIZE".
3. RE-TIGHTEN TOP NUT SNUG TIGHT AFTER GROUTING BASE PLATE AND WELDING PLATE WASHER.

3 ANCHOR BOLT DETAIL

SCALE: 3/4"=1'-0"

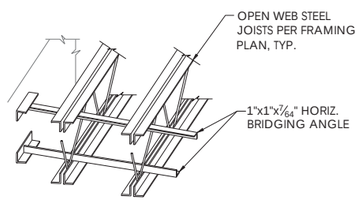

5 DETAIL @ JOIST BRIDGING

SCALE: 3/4"=1'-0"

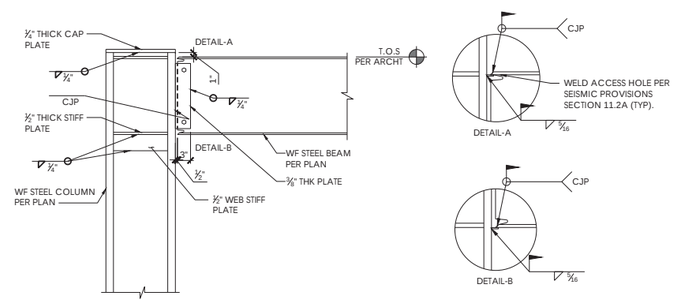

6 DETAIL @ MOMENT CONN. (WF)

SCALE: 3/4"=1'-0"

7 DETAIL

SCALE: 3/4"=1'-0"

8 DETAIL

SCALE: 3/4"=1'-0"

9 DETAIL

SCALE: 3/4"=1'-0"

10 DETAIL

SCALE: 3/4"=1'-0"

11 DETAIL

SCALE: 3/4"=1'-0"

Strucutal Innovations, LLC
1011 Bay Street, Suite 306
Beaufort, South Carolina 29902
www.structuralinnovationsllc.com
ph. 843.441.9828 email:arichardson@structural.innovations llc.com

SOUTH CAROLINA STRUCTURAL INNOVATIONS, LLC No. 3686 CERTIFICATE OF AUTHORIZATION

No.	REVISIONS	BY	DATE

WESTIN HILTON HEAD ISLAND RESORT AND SPA EXPANSION

TOWN OF HILTON HEAD ISLAND, SC

DETAILS

SOUTH CAROLINA PROFESSIONAL ENGINEER No. 22824 PHILIP ANDREW RICHARDSON

DATE: 09/12/16
SCALE: AS SHOWN
PROJECT NO: 16-0**

Sheet No.

S6.04

BEAM/ GIRDER SIZE	PLATE "A" THICKNESS INCH	NO. OF H.S. ASTM A-325N 3/4" DIA. BOLTS	PLATE "E"			WELD	HAS DIAMETER INCH	HAS MINIMUM EMBED.	NO. OF HEADED ANCHOR STUDS (HAS) WELDED TO PL "E" (SEE NOTE #2)
			THICKNESS INCH	WIDTH * INCH	DEPTH INCH	t3 INCH			
W12	3/8	3	3/4	10	15	5/16	3/4	6 5/8	3 ROWS OF 2 +1 (7 TOTAL)
W14	3/8	3	3/4	10	15	5/16	3/4	6 5/8	3 ROWS OF 2 +1 (7 TOTAL)
W16	3/8	4	3/4	10	15	5/16	3/4	6 5/8	3 ROWS OF 2 +1 (7 TOTAL)
W18	3/8	5	3/4	10	21	5/16	3/4	6 5/8	4 ROWS OF 2 +1 (9 TOTAL)
W24	1/2	7	3/4	10	21	5/16	3/4	6 5/8	5 ROWS OF 2 +1 (11 TOTAL)

* WHEN PLATE IS LOCATED AT THE END OF THE WALL, WIDTH SHALL MATCH THE WALL WITH STUDS LOCATED 2.5" FROM EDGE OF CONCRETE

NOTES:

1. A325N BOLTS SHALL BE TIGHTENED TO THE SNUG TIGHT CONDITION IN ACCORD WITH A.I.S.C. RECOMMENDATIONS.
2. SEE DETAIL 5 FOR STUD WELDING. PROVIDE ONE ADDITIONAL STUD AT TOP ROW ON EVERY PLATE "E" AS SHOWN.
3. USE SHORT-SLOTTED HORIZONTAL HOLES AT ALL BEAM TO EMBED PLATE CONNECTIONS WHERE REQUIRED FOR FIELD CONNECTIONS / TOLERANCE.
4. WHERE SHORT SLOTTED HOLES ARE USED (PER NOTE 3), AND AT DRAG AND MOMENT FRAME CONNECTIONS, PROVIDE 't3' WELD AT PLATE TO BEAM WEB CONNECTION.

1 BEAM SHEAR CONNECTION / EMBED PLATE SCHEDULE

SCALE: ¾"=1'-0"

BEAM/ GIRDER SIZE	PLATE "A" THICKNESS INCH	NO. OF H.S. ASTM A-325N 3/4" DIA. BOLTS	PLATE "E"			WELD	HAS DIAMETER INCH	HAS MINIMUM EMBED.	NO. OF HEADED ANCHOR STUDS (HAS) WELDED TO PL "E" (SEE NOTE #2)
			THICKNESS INCH	WIDTH * INCH	DEPTH INCH	t3 INCH			
W12	3/8	3	3/4	14	17	5/16	3/4	6 5/8	3 ROWS OF 2 +1 (7 TOTAL)
W14	3/8	3	3/4	14	17	5/16	3/4	6 5/8	3 ROWS OF 2 +1 (7 TOTAL)
W18	3/8	5	3/4	14	21	5/16	3/4	6 5/8	4 ROWS OF 2 +1 (9 TOTAL)
W24	3/8	7	3/4	14	27	5/16	3/4	6 5/8	5 ROWS OF 2 +1 (11 TOTAL)

* WHEN PLATE IS LOCATED AT THE END OF THE WALL, WIDTH SHALL MATCH THE WALL WITH STUDS LOCATED 2.5" FROM EDGE OF CONCRETE

2 BEAM MOMENT CONNECTION / EMBED PLATE SCHEDULE

SCALE: ¾"=1'-0"

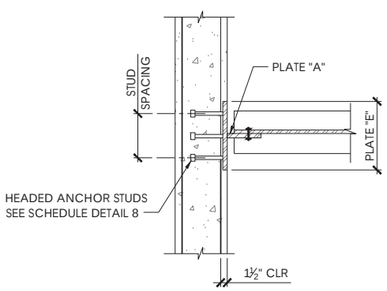

PLAN VIEW X1

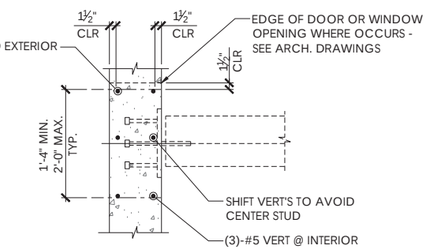

PLAN VIEW X2

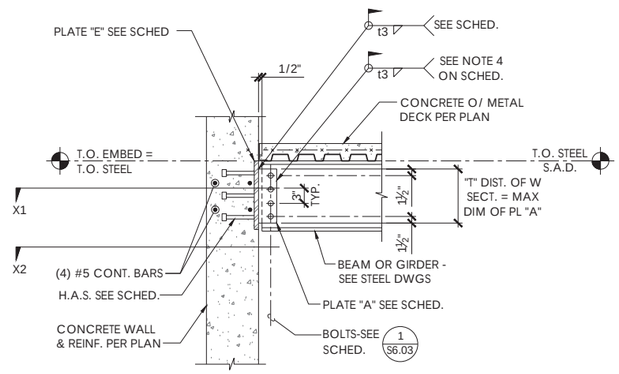

SECTION

NOTE:
VERT. REINF. NOT SHOWN, SEE CONC. WALL SCHED. & DETAILS.

3 BEAM /GIRDER TO CONCRETE WALL CONNECTION

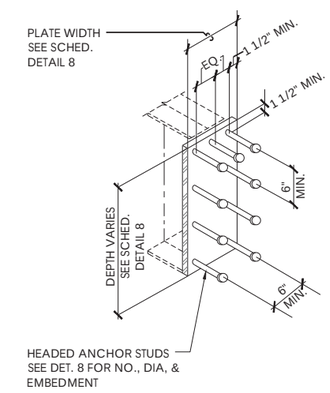

4 ISOMETRIC DETAIL "E"

SCALE: ¾"=1'-0"

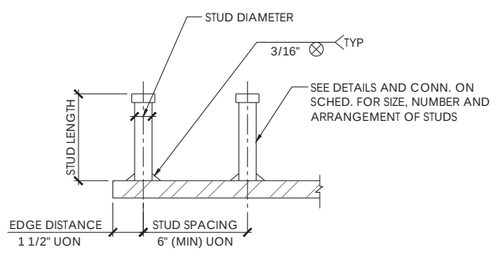

5 HEADED ANCHOR STUD WELDED TO PLATE

SCALE: ¾"=1'-0"

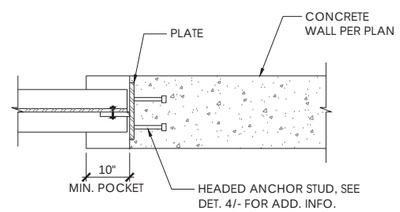

PLAN VIEW X-X

NOTE: FILL POCKET WITH GROUT AFTER NON-SHRINK BEARING PAD IS SET

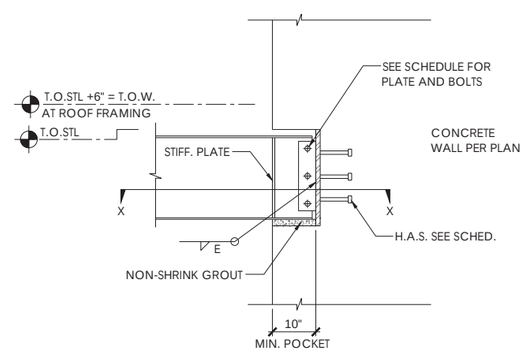

6 BEAM TO WALL END

SCALE: ¾"=1'-0"

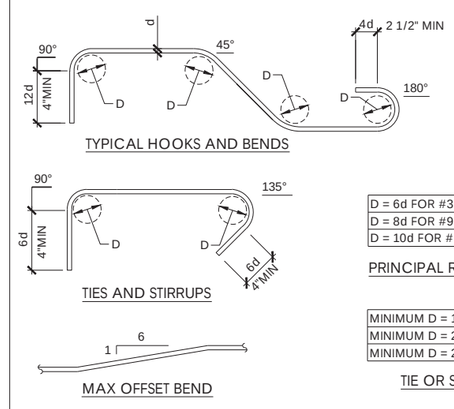

D = 6d FOR #3 TO #8
D = 8d FOR #9 TO #11
D = 10d FOR #14 TO #18

PRINCIPAL REINFORCING

MINIMUM D = 1 1/2" FOR #3
MINIMUM D = 2" FOR #4
MINIMUM D = 2 1/2" FOR #5

TIE OR STIRRUPS

NOTES:
ALL BENDS SHALL BE MADE COLD.

7 REBAR HOOKS AND BENDS

SCALE: ¾"=1'-0"

Strucutal Innovations, LLC
1011 Bay Street, Suite 306
Beaufort, South Carolina 29902
www.structuralinnovationsllc.com
ph. 843.441.9828 email:arichardson@structural innovations llc.com

SOUTH CAROLINA STRUCTURAL INNOVATIONS, LLC No. 3686 CERTIFICATE OF AUTHORIZATION

No.	REVISIONS	BY	DATE

WESTIN HILTON HEAD ISLAND RESORT AND SPA EXPANSION
TOWN OF HILTON HEAD ISLAND, SC

DETAILS

SOUTH CAROLINA PROFESSIONAL ENGINEER No. 22824 PHILIP ANDREW RICHARDSON

DATE	09/12/16
SCALE	AS SHOWN
PROJECT NO	16-0**

Sheet No.
S6.05

NOTE:
ALL STEEL EXPOSED TO WEATHER
SHALL BE HOT DIPPED GALVANIZED.

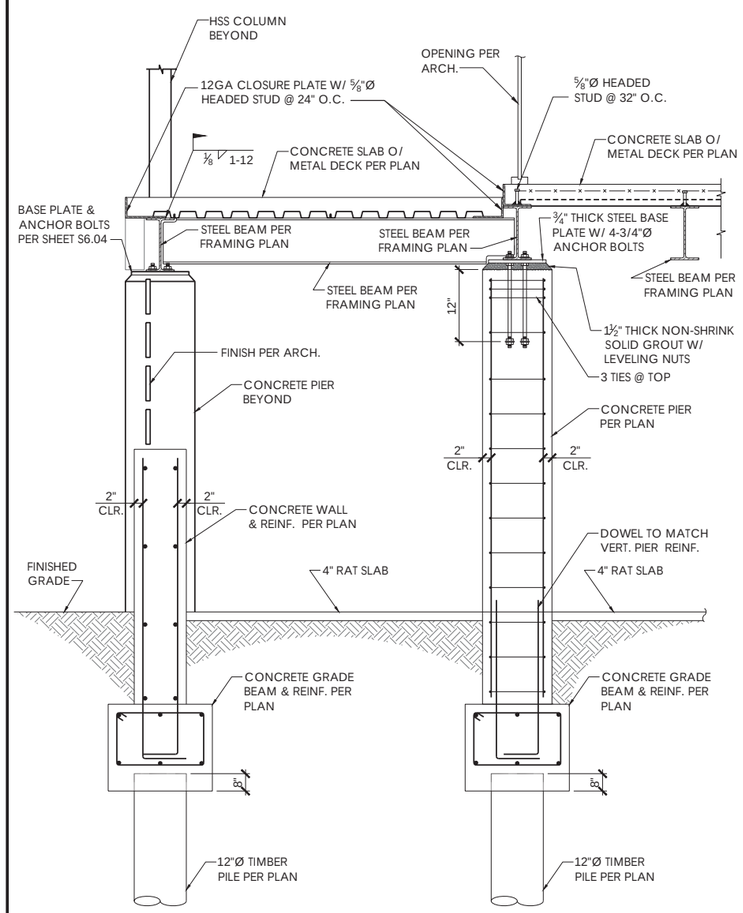

1 DETAIL SCALE: 3/4"=1'-0"

NOTE:
ALL STEEL EXPOSED TO WEATHER
SHALL BE HOT DIPPED GALVANIZED.

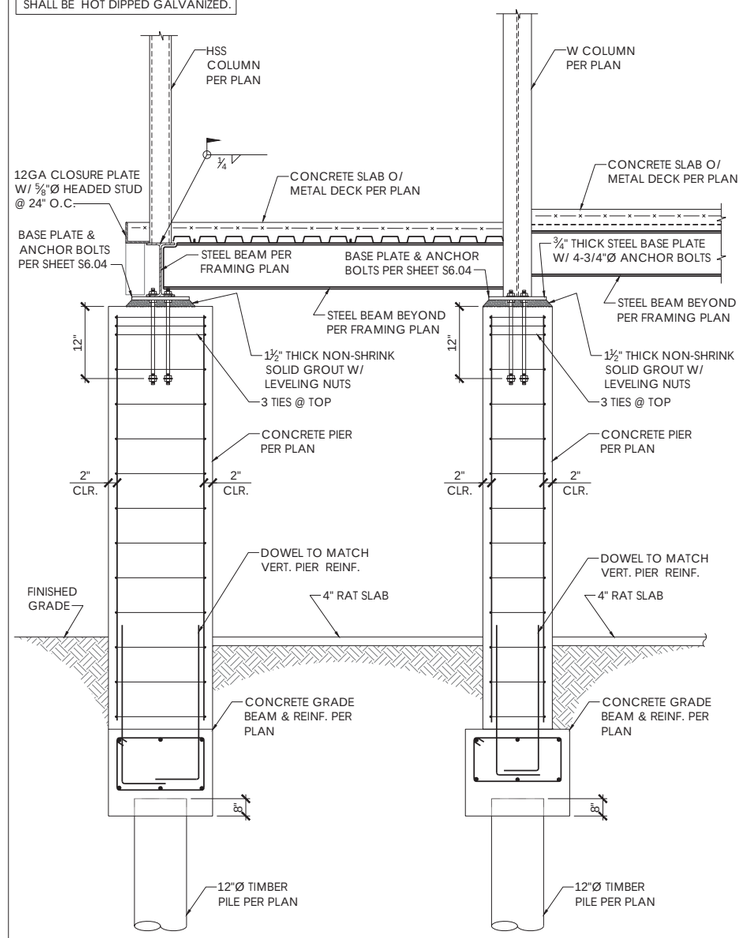

2 DETAIL SCALE: 3/4"=1'-0"

NOTE:
ALL STEEL EXPOSED TO WEATHER
SHALL BE HOT DIPPED GALVANIZED.

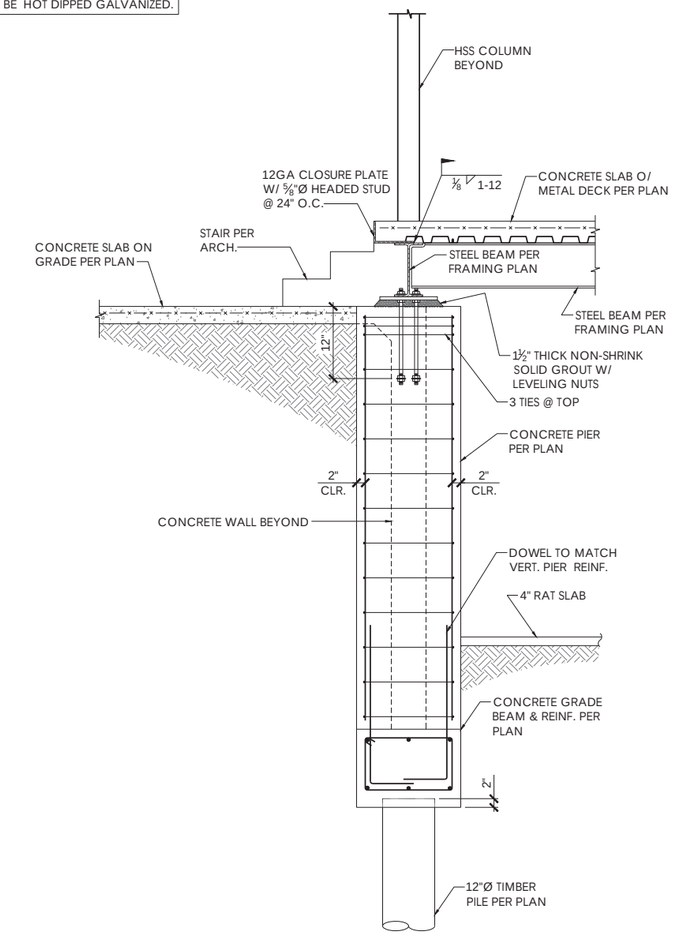

3 DETAIL SCALE: 3/4"=1'-0"

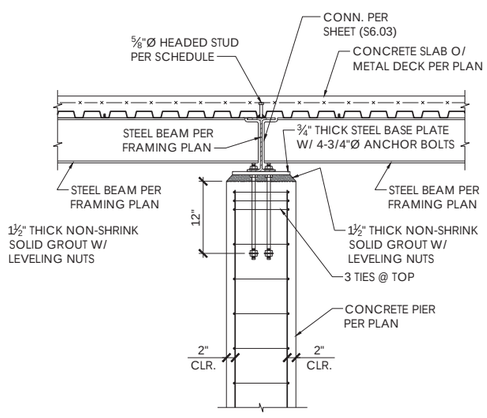

4 DETAIL SCALE: 3/4"=1'-0"

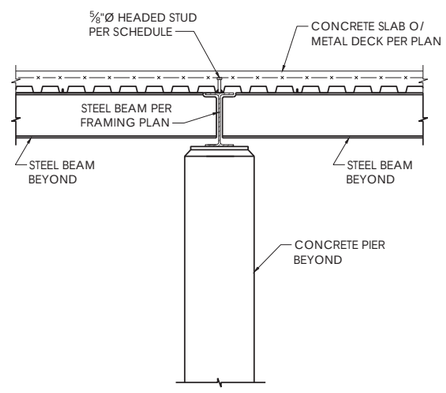

5 DETAIL SCALE: 3/4"=1'-0"

NOTE:
ALL STEEL EXPOSED TO WEATHER
SHALL BE HOT DIPPED GALVANIZED.

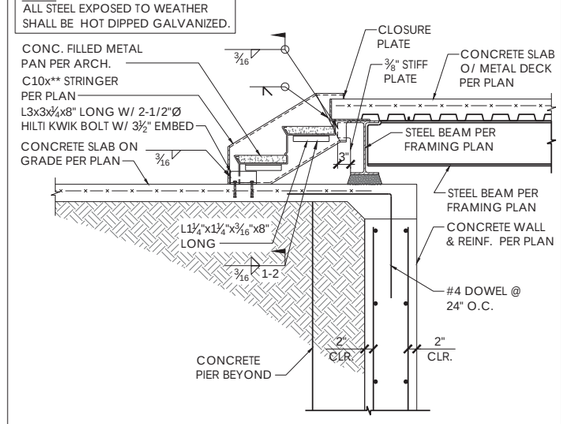

6 DETAIL SCALE: 3/4"=1'-0"

7 DETAIL SCALE: 3/4"=1'-0"

Strucutal Innovations, LLC
1011 Bay Street, Suite 306
Beaufort, South Carolina 29902
www.structuralinnovationsllc.com
ph. 843.441.9828 email:arichardson@structural.innovations llc.com

SOUTH CAROLINA STRUCTURAL INNOVATIONS, LLC No. 3686 CERTIFICATE OF AUTHORIZATION

No.	REVISIONS	BY	DATE

WESTIN HILTON HEAD ISLAND RESORT AND SPA EXPANSION
TOWN OF HILTON HEAD ISLAND, SC

DETAILS

SOUTH CAROLINA PROFESSIONAL ENGINEER No. 22824 PHILIP ANDREW RICHARDSON

DATE	09/12/16
SCALE	AS SHOWN
PROJECT NO	16-0**

Sheet No.
S6.06

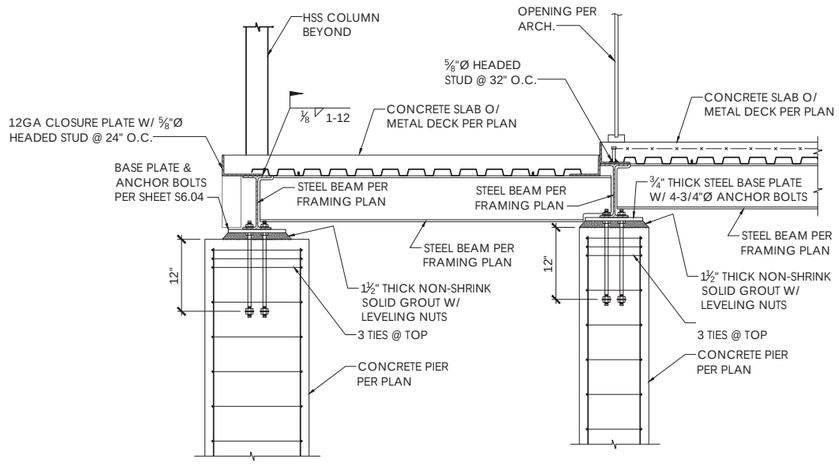

1 DETAIL

SCALE: 3/4"=1'-0"

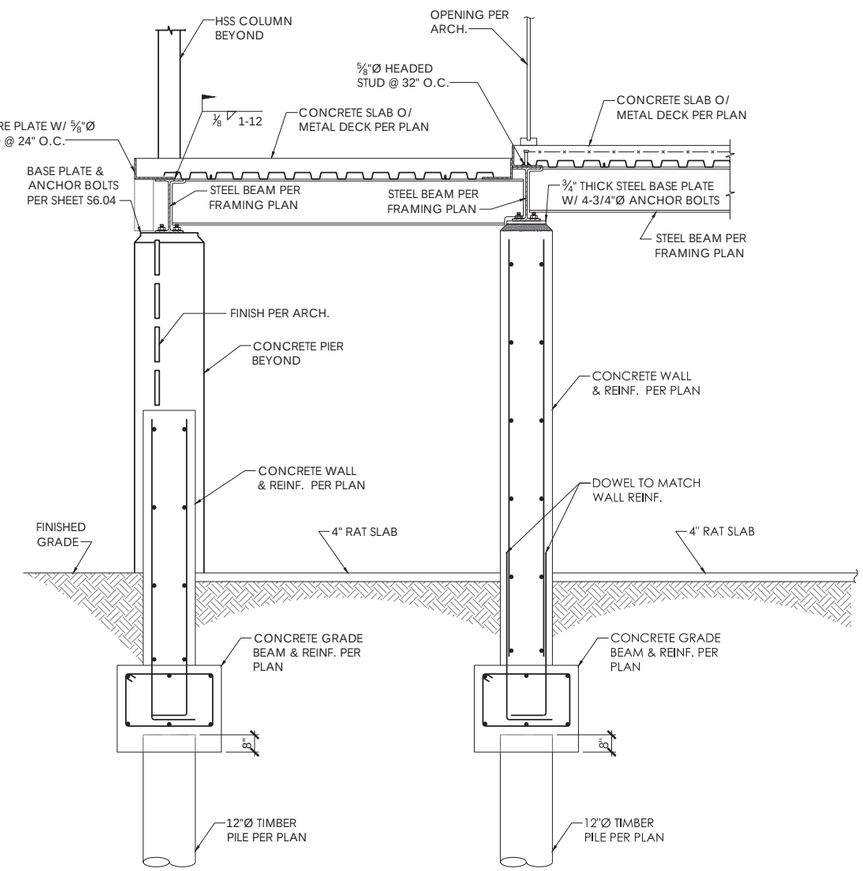

2 DETAIL

SCALE: 3/4"=1'-0"

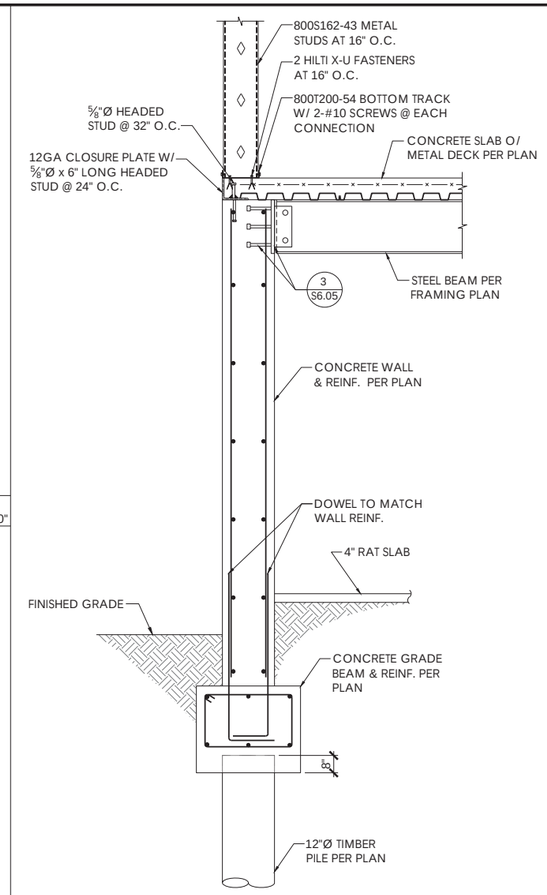

3 DETAIL

SCALE: 3/4"=1'-0"

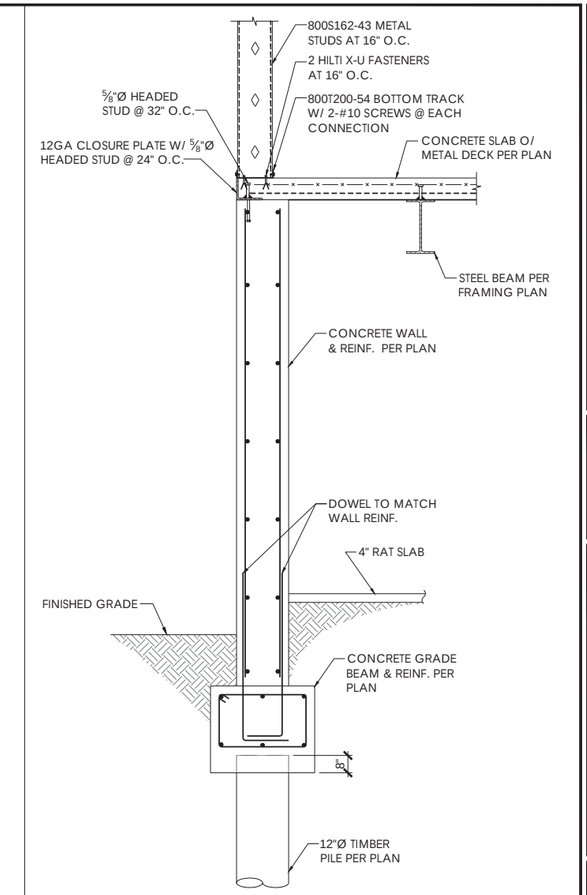

4 DETAIL

SCALE: 3/4"=1'-0"

5 DETAIL

SCALE: 3/4"=1'-0"

6 DETAIL

SCALE: 3/4"=1'-0"

Strucutal Innovations, LLC
1011 Bay Street, Suite 306
Beaufort, South Carolina 29902
www.structuralInnovationsllc.com
ph. 843.441.9828 email:arichardson@structural innovations llc.com

SOUTH CAROLINA STRUCTURAL INNOVATIONS, LLC No. 3686 CERTIFICATE OF AUTHORIZATION

No.	REVISIONS	BY	DATE

WESTIN HILTON HEAD ISLAND RESORT AND SPA EXPANSION
TOWN OF HILTON HEAD ISLAND, SC

DETAILS

SOUTH CAROLINA PROFESSIONAL ENGINEER No. 22824 PHILIP ANDREW RICHARDSON

DATE	09/12/16
SCALE	AS SHOWN
PROJECT NO.	16-0**

Sheet No.

S6.07

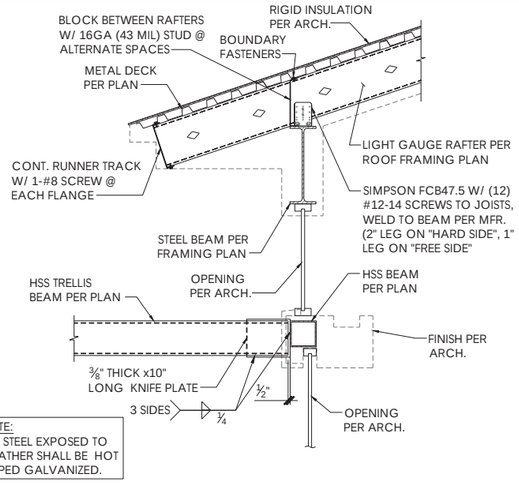

1 DETAIL SCALE: 3/4"=1'-0"

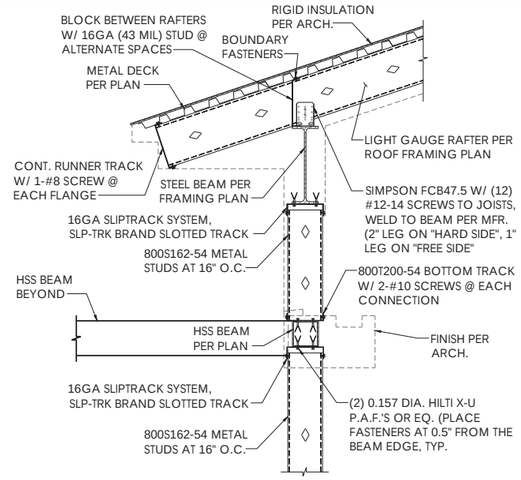

2 DETAIL SCALE: 3/4"=1'-0"

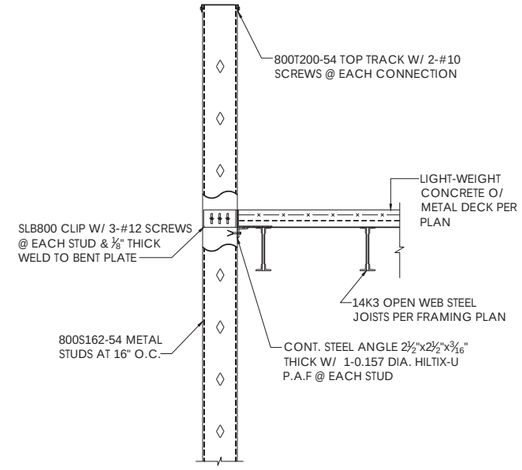

3 DETAIL SCALE: 3/4"=1'-0"

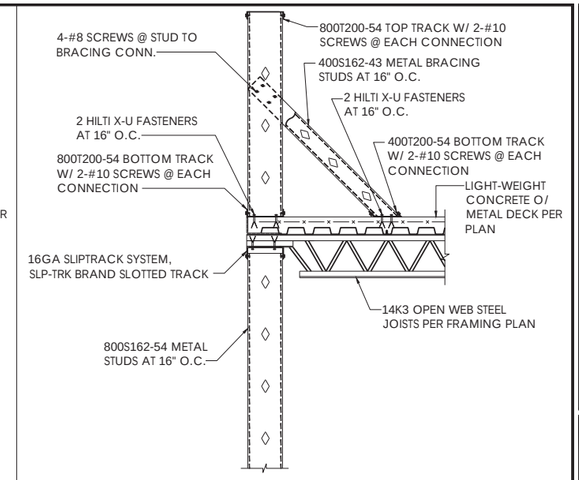

4 DETAIL SCALE: 3/4"=1'-0"

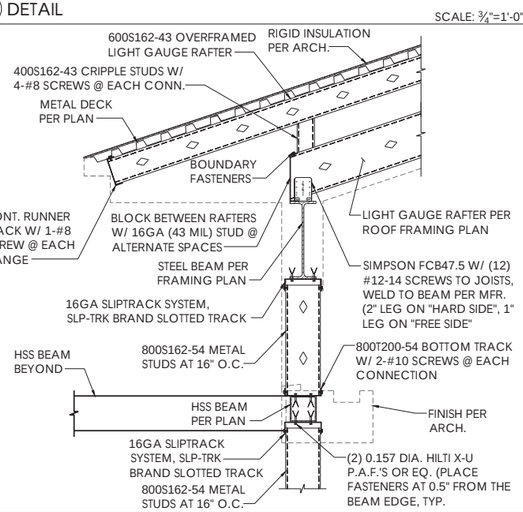

5 DETAIL SCALE: 3/4"=1'-0"

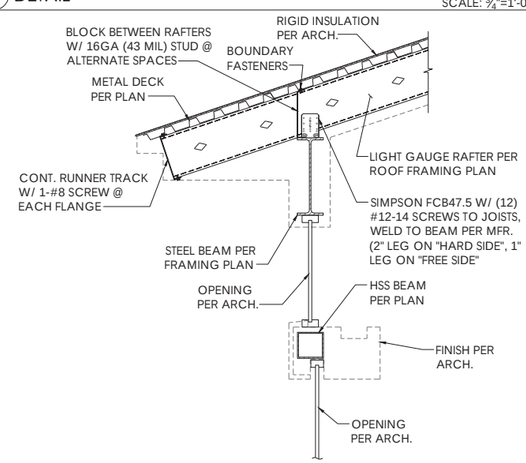

6 DETAIL SCALE: 3/4"=1'-0"

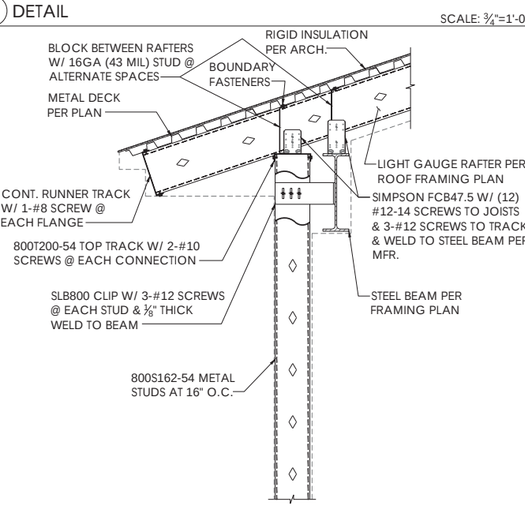

7 DETAIL SCALE: 3/4"=1'-0"

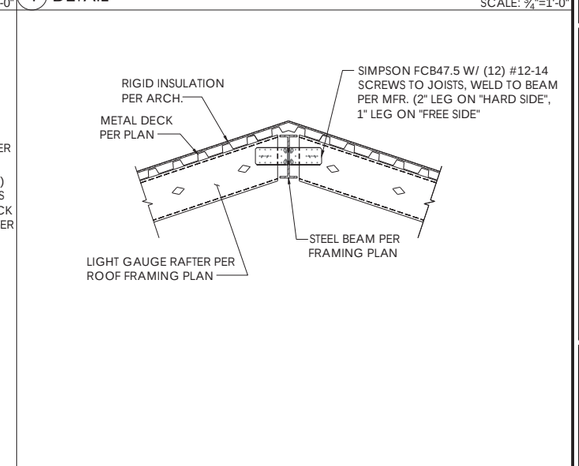

8 DETAIL SCALE: 3/4"=1'-0"

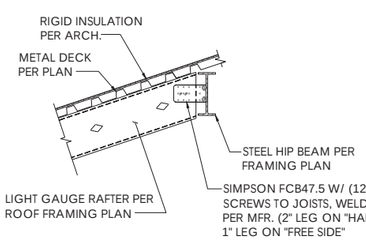

9 DETAIL SCALE: 3/4"=1'-0"

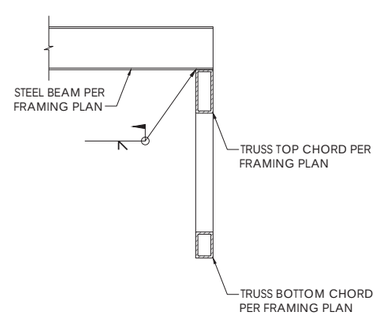

10 DETAIL SCALE: 3/4"=1'-0"

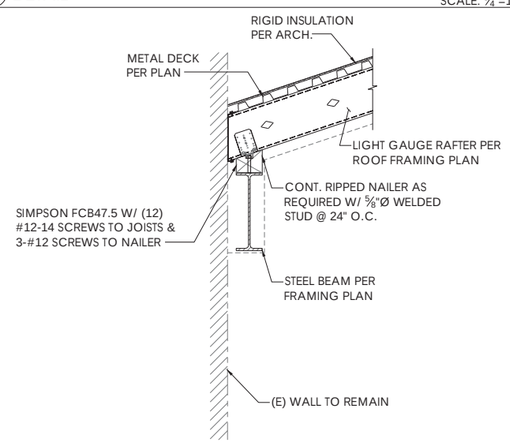

11 DETAIL SCALE: 3/4"=1'-0"

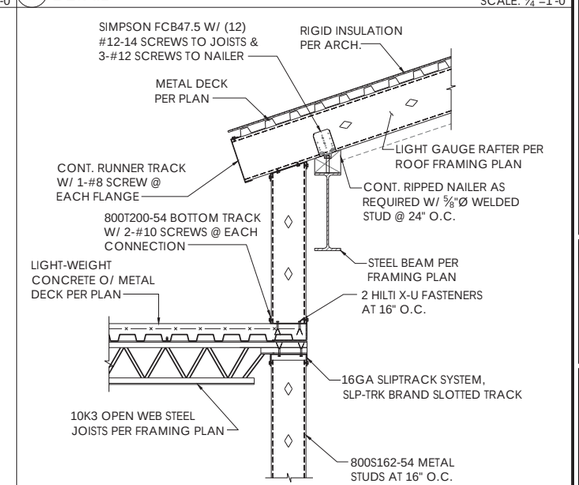

12 DETAIL SCALE: 3/4"=1'-0"

Strucutal Innovations, LLC
1011 Bay Street, Suite 306
Beaufort, South Carolina 29902
www.structuralinnovationsllc.com
ph. 843.441.9828 email:arichardson@structural innovations llc.com

SOUTH CAROLINA STRUCTURAL INNOVATIONS, LLC No. 3686 CERTIFICATE OF AUTHORIZATION

No.	REVISIONS	BY	DATE

WESTIN HILTON HEAD ISLAND RESORT AND SPA EXPANSION
TOWN OF HILTON HEAD ISLAND, SC

DETAILS

SOUTH CAROLINA REGISTERED PROFESSIONAL ENGINEER No. 22824 PHILIP ANDREW RICHARDSON

DATE	09/12/16
SCALE	AS SHOWN
PROJECT NO	16-0**

Sheet No.
S6.08

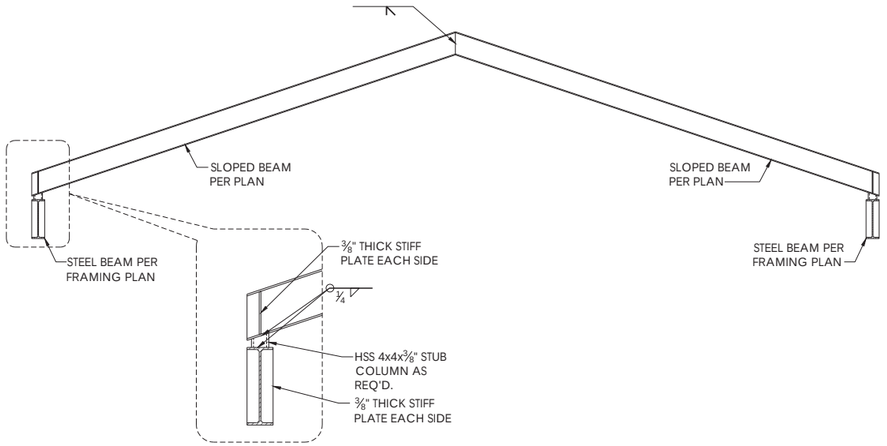

1 DETAIL

SCALE: 3/4"=1'-0"

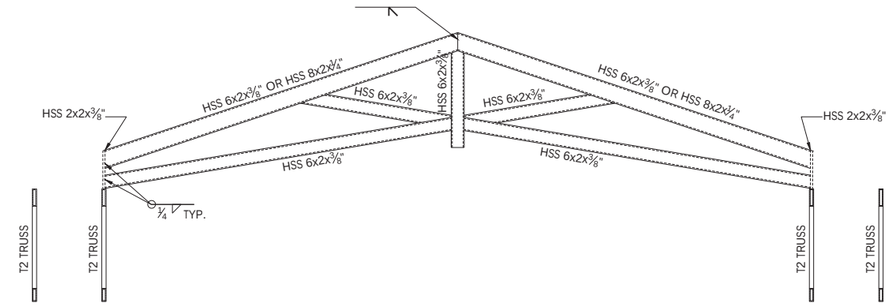

NOTE:
SEE ARCH. FOR DIMENSIONS OF TRUSS PROFILES

2 DETAIL @ TRUSS "T-1"

SCALE: NONE

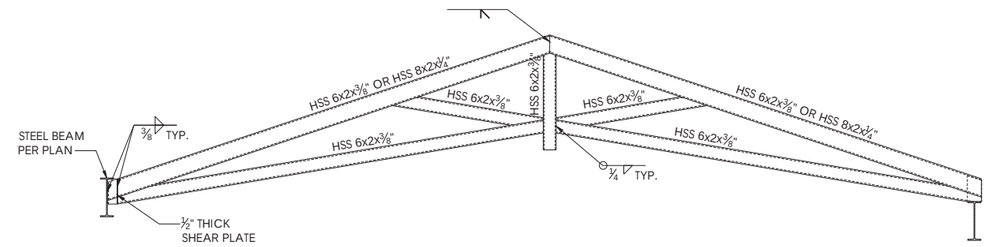

NOTE:
SEE ARCH. FOR DIMENSIONS OF TRUSS PROFILES

5 DETAIL @ TRUSS "T-2" & T-3

SCALE: NONE

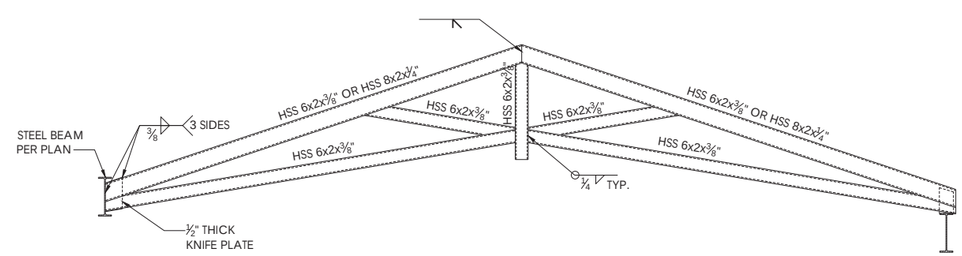

NOTE:
SEE ARCH. FOR DIMENSIONS OF TRUSS PROFILES

8 DETAIL @ TRUSS "T-4"

SCALE: 3/4"=1'-0"

6 NOT USED

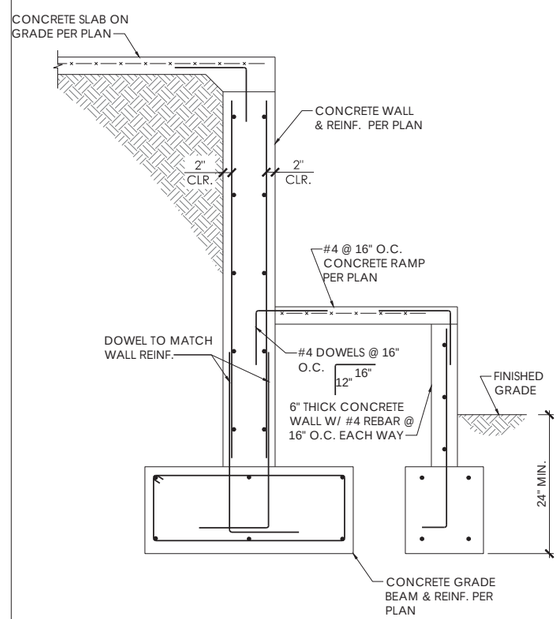

7 DETAIL

SCALE: 3/4"=1'-0"

Strucutal Innovations, LLC
1011 Bay Street, Suite 306
Beaufort, South Carolina 29902
www.structuralInnovationsllc.com
ph. 843.441.9828 email:arichardson@structural innovations llc.com

SOUTH CAROLINA
STRUCTURAL INNOVATIONS, LLC
No. 3686
CERTIFICATE OF AUTHORIZATION

No.	REVISIONS	BY	DATE

WESTIN HILTON HEAD ISLAND
RESORT AND SPA EXPANSION
TOWN OF HILTON HEAD ISLAND, SC

DETAILS

SOUTH CAROLINA
PROFESSIONAL ENGINEER
No. 22824
PHILIP ANDREW RICHARDSON

DATE	09/12/16
SCALE	AS SHOWN
PROJECT NO.	16-0**

Sheet No.
S6.09

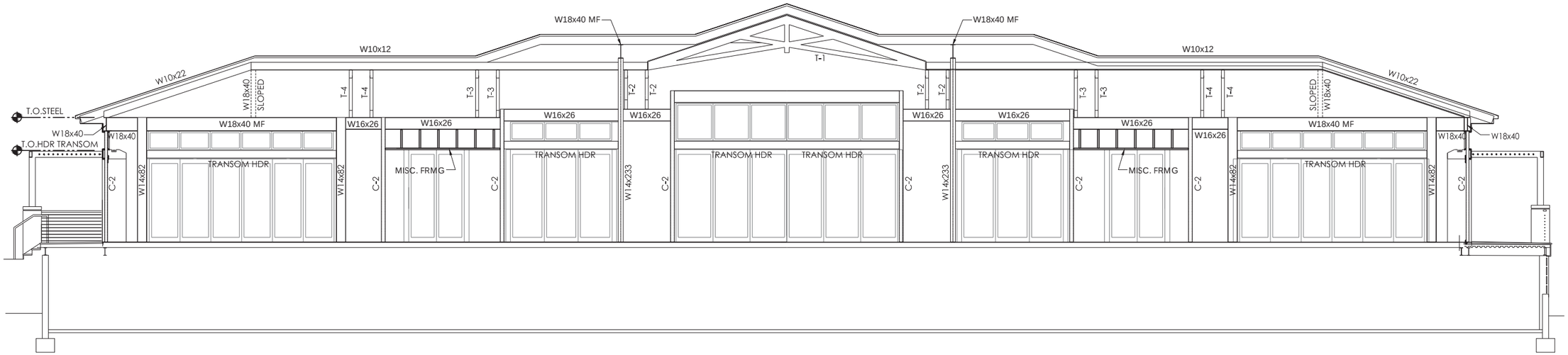

BUILDING SECTION @ "A"

SCALE: 3/16"=1'-0"

BUILDING SECTION @ "B"

SCALE: 3/16"=1'-0"

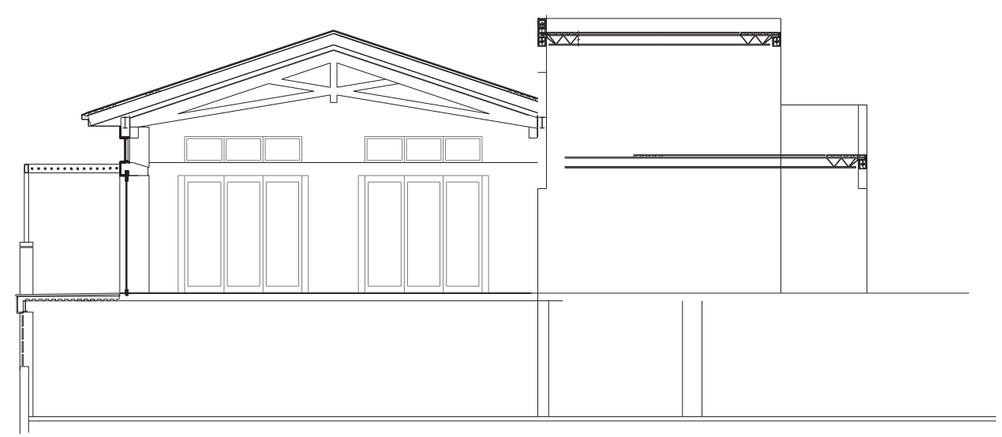

BUILDING SECTION @ "C"

SCALE: 3/16"=1'-0"

Strucutal Innovations, LLC
1011 Bay Street, Suite 306
Beaufort, South Carolina 29902
www.structuralinnovationsllc.com
ph. 843.441.9828 email:arichardson@structural innovations llc.com

SOUTH CAROLINA
STRUCTURAL INNOVATIONS, LLC
No. 3686
CERTIFICATE OF AUTHORIZATION

No.	REVISIONS	BY	DATE

WESTIN HILTON HEAD ISLAND
RESORT AND SPA EXPANSION
TOWN OF HILTON HEAD ISLAND, SC

BUILDING SECTIONS

SOUTH CAROLINA
PHILIP ANDREW RICHARDSON
No. 22824
REGISTERED PROFESSIONAL ENGINEER

DATE	09/12/16
SCALE	AS SHOWN
PROJECT NO	16-0**

Sheet No.

S7.00

DRAWING NOTES (1)

1. PAC-1 LOCATED ON ROOF ABOVE. PROVIDE WITH SEISMIC RATED ROOF CURB. REFER TO ROOF PLAN.
2.

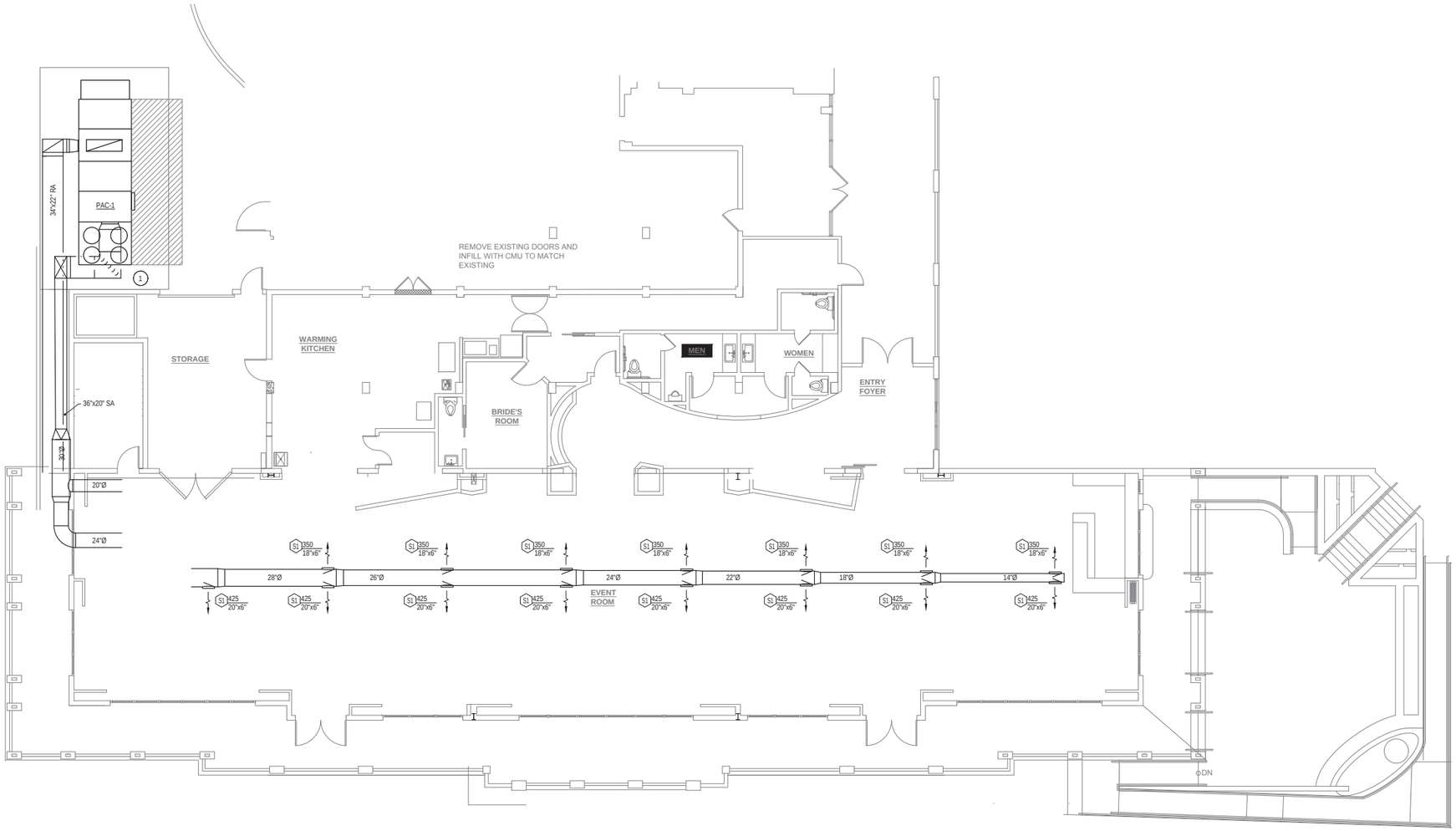

F1 MECHANICAL HVAC PLAN - FIRST FLOOR
1/8" = 1' - 0"

HENSLEY & GOERLING
CONSULTING ENGINEERS, LLC

PO Box 2143
Summerville, SC 29485
HGCEng.com

843-486-2869 - JDG
843-437-1388 - DWM

SOUTH CAROLINA
HENSLEY AND GOERLING CONSULTING ENGINEERS, LLC
No. 5279
CERTIFICATE OF AUTHORIZATION

NOT FOR CONSTRUCTION

ALL DESIGN, DRAWINGS, AND SPECIFICATIONS SHOWN ARE PROPERTY OF HENSLEY & GOERLING CONSULTING ENGINEERS, LLC. ANY UNAUTHORIZED ATTEMPT TO REPRODUCE OR DUPLICATE IS SUBJECT TO LEGAL PROSECUTION. THESE PLANS SHALL NOT BE USED FOR CONSTRUCTION PURPOSES WITHOUT THE WRITTEN APPROVAL OF HENSLEY & GOERLING CONSULTING ENGINEERS, LLC.

PROJECT TITLE:
WESTIN RESORT HILTON HEAD
LOCATION:
HILTON HEAD ISLAND, SOUTH CAROLINA

SHEET NAME:
MECHANICAL HVAC PLAN - FIRST FLOOR

△	SUBMISSION / REVISION	DATE
X	PROGRESS SET	09/06/2016

DRAWN BY:	XXX
CHECKED BY:	XXX
DATE:	AUGUST 4, 2016
PROJECT # :	16-144

M101
SHEET NO.

one inch = one foot

three quarters inch = one foot

one half inch = one foot

three eighths inch = one foot

one quarter inch = one foot

one eighth inch = one foot

one sixteenth inch = one foot

LEGENDS

	2X4 FIXTURE
	2X2 FIXTURE
	1X4 FIXTURE
	WALL MTD FIXTURE
	CEILING MTD EXIT SIGN W/ ARROWS AS INDICATED (80" AFF TO BOTTOM)
	WALL MTD EXIT SIGN W/ ARROWS AS INDICATED (90" AFF)
	WALL MTD EXIT SIGN/BATTERY PACK COMBO W/ ARROWS AS INDICATED (90" AFF)
	BATTERY PACK W/ NO. OF HEADS AS SHOWN.
$ $_2 $_3 $_4	SINGLE-POLE DOUBLE-POLE 3-WAY AND 4-WAY SWITCHES (48" AFF)
	NEW TELECOMMUNICATIONS OUTLET. PROVIDE 3/4" CONDUIT TO ACCESSIBLE CEILING.
	DISCONNECT SWITCH - NON-FUSED
J	JUNCTION BOX OR PULL BOX
J	WALL MOUNTED JUNCTION BOX OR PULL BOX
	DUPLEX RECEPTACLE. "GFI" INDICATES GROUND FAULT RECEPTACLE. "WP" INDICATES WEATHERPROOF RECEPTACLE. "AC" INDICATES MOUNTED ABOVE COUNTER
	DOUBLE DUPLEX (QUAD) RECEPTACLE. "GFI" INDICATES GROUND FAULT RECEPTACLE. "WP" INDICATES WEATHERPROOF RECEPTACLE.
	DUPLEX RECEPTACLE MOUNTED 48"AFF. "GFI" INDICATES GROUND FAULT RECEPTACLE. "WP" INDICATES WEATHERPROOF RECEPTACLE.
	POINT OF DISCONNECTION
	POINT OF RECONNECTION
4#12,1#12G,1"CND	TYPICAL WIRE AND CONDUIT CALLOUT. G-GROUND
30A,600V,3P,NEMA1	TYPICAL DISCONNECT CALLOUT.

ABBREVIATIONS

1PH	SINGLE-PHASE
3PH	THREE-PHASE
A	AMP
AFC	ABOVE FINISHED CEILING
AFF	ABOVE FINISHED FLOOR
AHJ	AUTHORITY HAVING JURISDICTION
AHU	AIR HANDLER UNIT
BFC	BELOW FINISHED CEILING
BFF	BELOW FINISHED FLOOR
BIU	PATIENT BED INTERFACE UNIT
CATV	COMMUNITY ANTENNA TELEVISION
CLG	CEILING MOUNTED
COTR	CONTRACTING OFFICER TECHNICAL REPRESENTATIVE
CND	CONDUIT
ECB	ENCLOSED CIRCUIT BREAKER
EXTG	EXISTING
FACP	FIRE ALARM CONTROL PANEL
GFCI	GROUND FAULT CIRCUIT INTERRUPTER
J-BOX	JUNCTION BOX
MCB	MAIN CIRCUIT BREAKER
MLO	MAIN LUGS ONLY
MTD	MOUNTED
NEMA	NATIONAL ELECTRICAL MANUFACTURER ASSOSIATION
NFDS	NON-FUSIBLE DISCONNECT SWITCH
NTS	NOT TO SCALE
P	POLE
PBPU	PATIENT BED PREFABRICATED UNIT
PH	PHASE
PNL	PANEL
PWR	POWER
RTU	ROOF TOP UNIT
SSCR	SHORT CIRCUIT CURRENT RATING
SD	SMOKE DETECTOR
UNO	UNLESS NOTED OTHERWISE
VFD	VARIABLE FREQUENCY DRIVE
WH	WATER HEATER
XFMR	TRANSFORMER

ELECTRICAL GENERAL DEMOLITION NOTES

A. ALL WORK SHOWN WITH HATCHED OR DASHED LINES INDICATE ITEMS TO BE DEMOLISHED. ALL WORK SHOWN LIGHT AND THIN INDICATED EXISTING TO REMAIN. ALL WORK SHOWN DARK AND HEAVY INDICATE NEW WORK. SEE ARCHITECTURAL DRAWINGS AND CODED DEMOLITION NOTES FOR SPECIFIC INFORMATION.

B. LOCATION OF EXISTING EQUIPMENT, LIGHTING FIXTURES, LIGHTING DEVICES, RECEPTACLES, ETC. ARE APPROXIMATE. THE CONTRACTOR SHALL EXAMINE THE SITE PRIOR TO BUILDING AND AFTER DEMOLITION HAS EXPOSED "AS-BUILT" CONDITIONS TO VERY EACH ITEM. THE CONTRACTOR SHALL MAKE ADJUSTMENTS AND/OR ALTERATIONS AS NECESSARY TO INSTALL COMPLETE AND OPERABLE SYSTEMS IN ACCORDANCE WITH THE CODES HAVING JURISDICTION AT NO ADDITIONAL COST TO OWNER.

C. ALL OPENINGS AND SURFACES MADE BARE BY DEMOLITION AND/OR REMOVAL OF EQUIPMENT, FIXTURES, DEVICES, ETC. SHALL BE REPAIRED AND/OR PATCHED TO MATCH ADJACENT FINISH. PREPARE SURFACES TO RECEIVE NEW FINISH, SEE ARCHITECTURAL DRAWINGS FOR NEW FINISH SCHEDULE. ALL REPAIRS AND NEW FINISH SHALL BE BY TRADES SKILLED IN FINISH WORKS UNDER EMPLOY OF THE GENERAL CONTRACTOR.

D. DURING THE LIFE OF THE CONTRACT (CONSTRUCTION AND DEMOLITION TO POINT OF BENEFICIAL OCCUPANCY BY OWNER. THE CONTRACTOR SHALL PROTECT ALL SYSTEMS OR PORTIONS OF SYSTEMS TO REMAIN FOR REUSE FROM DAMAGE.

E. SEE ARCHITECTURAL DRAWINGS AND SPECIFICATION FOR ADDITIONAL INFORMATION. COORDINATE ALL DEMOLITION WITH ALL TRADES INVOLVED.

F. EXISTING CONDUITS CONCEALED IN FLOOR SLAB OR UNDERGROUND AND NOT INDICATED OR SPECIFIED FOR REUSE IN NEW WORK SHALL BE ABANDONED UNLESS NOTED OTHERWISE. CUT CONDUIT AT FLOOR AND MINIMUM 12" BELOW GRADE.

FIRE ALARM GENERAL NOTES

A. CONTRACTOR SHALL SUPPLY AND INSTALL A COMPLETE AND FUNCTIONAL FIRE ALARM SYSTEM. SYSTEM MUST BE INSTALLED AS PER PLANS AND A SUBMITTED TO ENGINEER FIRST FOR APPROVAL, PRIOR TO SUBMITTING TO THE LOCAL AUTHORITY HAVING JURISDICTION FOR APPROVAL.

B. WHEREVER POSSIBLE LOCATE WALL MOUNTED EQUIPMENT ON WALLS WHICH WILL PERMIT EQUIPMENT TO BE FLUSH OR SEMI FLUSH MOUNTED.

C. ALL PROPOSED LOCATION OF DEVICES SHOWN ON THE PLANS ARE APPROXIMATE AND EXACT LOCATION SHALL BE VERIFIED IN THE FIELD WITH ARCHITECT.

D. ALL PROPOSED DEVICES SHALL BE MOUNTED TO CONFORM TO ALL LOCAL, NFPA, AND ADA REQUIREMENTS. ALL HEIGHTS SHOULD BE FIGURED FROM FINISHED FLOOR HEIGHT.

E. ALL CONDUITS PENETRATING WALLS SHALL HAVE APPROVED FIRE STOP CAULKING INSTALLED.

F. NO DETECTORS SHALL BE MOUNTED DIRECTLY TO CEILING TILES OR SHEETROCK. ALL DEVICES MUST HAVE BOXES INSTALLED WITH THE PROPER FASTENING DEVICES SUCH AS T-BARS IN SUSPENDED CEILINGS.

G. ALL REMOTE POWER SUPPLIES SHALL BE SUPERVISED WITH MONITOR MODULES TO MONITOR POWER LOSS AND TROUBLE CONDITIONS.

H. 120 VOLT BREAKERS MUST HAVE BREAKER LOCK INSTALLED AS WELL AS BEING PAINTED RED AND LABELED PROPERLY.

I. WIRING METHODS:
   1. ALL 120 VOLT WIRING SHALL CONSIST OF PULLED CONDUCTORS INSTALLED IN EMT CONDUIT EXCEPT THAT 120 VOLT WIRING CONCEALED ABOVE SUSPENDED CEILINGS MAY CONSIST OF MC ARMORED CABLE.
   2. ALL FIRE ALARM CABLE BELOW CEILING HEIGHT IN OPEN AREAS TO BE IN CONDUIT MINIMUM SIZE 3/4" EMT UNLESS OTHER CONDUITS IN THOSE AREAS ARE RIGID GALVANIZED TYPE.
   3. ALL FIRE ALARM CABLES INSTALLED ABOVE SUSPENDED CEILINGS MUST BE PLENUM RATED, BUNDLED, AND SECURED TO BUILDING STRUCTURE. ALL CABLES INSTALLED ABOVE CEILINGS MUST BE INSTALLED ABOVE MECHANICAL AND ELECTRICAL EQUIPMENT. CABLES CANNOT BE SUPPORTED BY CEILING SUPPORT WIRES.
   4. ALL FIRE ALARM JUNCTION BOXES MUST HAVE COVERS PAINTED RED ABOVE AND BELOW CEILINGS.
   5. ALL TAMPER SWITCHES AND WATERFLOW SWITCHES MUST HAVE JUNCTION BOXES ON ADJACENT WALLS WITH SEAL TIGHT FLEXIBLE CONDUIT. OPEN CABLE AND GREENFIELD CABLE WILL NOT BE ACCEPTED.
   6. ALL PROPOSED WIRING FOR FIRE ALARM SYSTEM SHALL BE TYPE FPLP AND CONFORM TO MANUFACTURERS RECOMMENDATIONS FOR INSTALLATIONS. MINIMUM SIZE CABLES FOR INITIATION CIRCUITS SHALL BE 18 GAUGE AND MINIMUM SIZE CABLES FOR INDICATION CIRCUITS SHALL BE 14 GAUGE. CLASS B CABLING ACCEPTABLE NO T-TAPPING WILL BE ALLOWED.
   7. ALL CABLES MUST BE FREE OF SHORTS AND GROUNDS PRIOR TO FINAL CONNECTIONS.

FIRE ALARM LEGEND

F	MANUAL PULL STATION/FIRE ALARM BOX
S	SMOKE DETECTOR DEVICE (PHOTOELECTRIC, CEILING MOUNTED)
H	HEAT DETECTOR DEVICE
H	HORN/STROBE APPLIANCE (WALL MOUNTED)
FAA	FIRE ALARM ANNUNCIATOR UNIT (PANEL)
FACP	FIRE ALARM CONTROL PANEL
TS	TAMPER SWITCH
FS	FLOW SWITCH

ELECTRICAL GENERAL NOTES

A. ALL RECEPTACLE OUTLETS SHALL BE 20 AMP, COMMERCIAL GRADE, 125 VAC, 2-POLES, 3-WIRE, DUPLEX, NEMA 5-20R TYPE, WHITE IN COLOR.

B. THE CONTRACTOR SHALL COORDINATE ALL REQUIRED SHUTDOWNS ON EXISTING UTILITIES WITH UTILITY COMPANY.

C. ALL WORK SHALL COMPLY WITH THE LATEST ADOPTED EDITION OF THE NEC, NFPA, IBC, AND ANY APPLICABLE LOCAL ORDINANCE.

D. ALL WIRING SHALL BE IN CONDUIT. MINIMUM CONDUIT SIZE SHALL BE 3/4". MINIMUM CONDUCTOR SIZE SHALL BE #12 AWG. ALL CIRCUITS SHALL BE PROVIDED WITH AN INDIVIDUAL NEUTRAL AND GROUNDING CONDUCTOR WITH THE PHASE CONDUCTOR. MC CABLE AND 1/2" CONDUIT IS ACCEPTABLE IF APPROVED BY AHJ.

E. THE ELECTRICAL DRAWINGS ARE SCHEMATIC IN NATURE. BEFORE STARTING THE WORK THE CONTRACTOR SHALL REVIEW ALL OTHER DISCIPLINE DRAWINGS AND VERIFY FIELD CONDITIONS AND SHALL MAKE ANY REQUIRED MINOR ADJUSTMENTS. ANY MAJOR DISCREPANCIES FOUND SHALL BE BROUGHT TO THE ATTENTION OF THE CONTRACTOR.

F. ALL CONDUITS USED FOR POWER AND TELECOMMUNICATION SYSTEMS SHALL BE EMT WITH COMPRESSION TYPE FITTINGS AND BODIES. SUPPORT ALL CONDUITS WITH ZINC COATED CONDUIT STRAPS AND P-1000 UNISTRUT CHANNELS.

G. ALL CONDUCTORS SHALL BE SOLID COPPER. UNLESS NOTED OTHERWISE, CONDUCTORS INSULATION SHALL BE DUAL RATED AT THHN/THWN.

H. ALL DEVICES, EQUIPMENT MATERIAL AND LABOR SHALL BE PROVIDED BY THE CONTRACTOR UNLESS NOTED OTHERWISE.

I. ALL ELECTRICAL EQUIPMENT AND DEVICES SHALL BE MOUNTED AS PER EQUIPMENT AND DEVICE MANUFACTURER RECOMMENDATIONS.

J. SUB-CONTRACTOR SHALL PROVIDE SUBMITTALS TO CONTRACTOR/ARCHITTECT FOR REVIEW AND APPROVAL OF ALL ELECTRICAL EQUIPMENT AND DEVICES DESCRIBED IN THE DRAWINGS. SUBMITTALS SHALL INCLUDE CUT SHEETS, DIMENSIONS, WIRING DIAGRAMS, ACCESSORIES, OPERATION MANUALS, AND ALL NECESSARY INFORMATION FOR REVIEWER TO MAKE A SOUND EVALUATION.

K. PROVIDE STARTUP OF ALL ELECTRICAL SYSTEMS AND COORDINATE WITH CONTRACTOR STARTUP WITNESSING.

L. CONTRACTOR SHALL BE RESPONSIBLE FOR PROVIDING A COMPLETE SET OF RECORD DRAWINGS TO THE OWNER AT THE END OF THE CONSTRUCTION.

M. ALL MATERIALS AND EQUIPMENT TO BE INSTALLED SHALL BE NEW AND FREE OF DEFECTS. ALL ELECTRICAL EQUIPMENT SHALL COMPLY WITH NATIONAL ELECTRICAL MANUFACTURERS ASSOCIATION (NEMA) STANDARDS AND SHALL BE UL LABELED. ALL ELECTRICAL EQUIPMENT AND MATERIALS SHALL BE INSTALLED IN A WORKMANLIKE MANNER.

N. CONTRACTOR SHALL PROVIDE ALL NECESSARY ELECTRICAL EQUIPMENT BRACING TO COMPLY WITH THE CURRENT SEISMIC.

O. COORDINATE ALL REQUIRED FINAL CONNECTIONS TO MECHANICAL HVAC, APPLIANCES, AND EQUIPMENT WITH VENDOR SHOP DRAWINGS.

P. ALL TELECOMMUNICATIONS OUTLETS SHALL HAVE 3/4"CONDUIT STUBBED UP TO ACCESSIBLE CEILING.

Q. COORDINATE COLOR AND FINISHES WITH OWNER/CONTRACTOR/ARCHITECT.

R. REFER TO ARCHITECTURAL REFLECTED CEILING PLANS FOR EXACT LOCATION FIXTURES.

S. COORDINATE FINAL EQUIPMENT/FIXTURE LOCATIONS WITH THE GENERAL CONTRACTOR. THE LOCATION AS INDICATED ON THE DRAWING IS APPROXIMATE. INSTALL ALL MECHANICAL EQUIPMENT SUCH THAT MANUFACTURER'S MAINTENANCE AREA IS CLEAR.

T. COORDINATE ALL MECHANICAL, PLUMBING AND ELECTRICAL WORK & EQUIPMENT WITH STRUCTURAL MEMBERS, ELECTRICAL WORK, FIXTURES AND ALL OTHER TRADES.

U. THIS FACILITY SHALL COMPLY WITH THE AMERICANS WITH DISABILITIES ACT (ADA) ACCESSIBILITY GUIDELINES FOR BUILDINGS AND FACILITIES.

V. ALL EQUIPMENT, DEVICES AND FIXTURES SPECIFIED ARE PERFORMANCE BASED. EQUALS ARE ALLOWED AS LONG AS THEY MEET THE PERFORMANCE REQUIREMENTS OF THE SPECIFIED EQUIPMENT, DEVICES AND FIXTURES.

W. AIC RATING OF ALL EQUIPMENT SHALL MEET OR EXCEED THE UTILITY AVAILABLE FAULT CURRENT (AIC RATING). IT IS THE RESPONSIBILITY OF THE CONTRACTOR TO COORDINATE WITH UTILITY AND PROVIDE EQUIPMENT AS NECESSARY AT NO COST TO THE OWNER.

X. ELECTRICAL SINGLE LINE DIAGRAM IS TO SHOW GENERAL INTENT. CONTRACTOR TO COORDINATE EXACT REQUIREMENTS WITH UTILITY.

Y. CONTRACTOR SHALL VISIT THE SITE PRIOR TO BIDDING TO THOROUGHLY UNDERSTAND EXISTING SITE CONDITIONS, SO THAT ANY DEVIATIONS TO THE PLANS AND SPECIFICATIONS ARE AT NO COST TO THE OWNER.

Z. EMERGENCY EGRESS LIGHTING SHOWN IS SCHEMATIC IN NATURE. MINOR ADJUSTMENTS MAY BE NEEDED IN THE FIELD AS DEEMED BY THE AHJ. CONTRACTOR SHALL PERFORM WORK NEEDED AT NO ADDITIONAL COST TO THE OWNER.

AA. LIGHTING IN THE KITCHEN SHOWN IS SCHEMATIC IN NATURE. MINOR ADJUSTMENTS MAY BE NEED IN THE FIELD AS DEEMED BY THE AHJ OR DHEC. CONTRACTOR SHALL PERFORM WORK NEEDED AT NO ADDITIONAL COST TO THE OWNER.

AB. CONTRACTOR TO VERIFY AVAILABLE AIC RATING FROM UTILITY AND PROVIDE NEXT HIGHER STANDARD RATING. ALL ELECTRICAL EQUIPMENT SHALL BE FULLY RATED. SERIES RATING IS NOT ACCEPTABLE. CONTRACTOR SHALL PROVIDE LABEL STATING AVAILABLE AIC RATING ON SERVICE ENTRANCE EQUIPMENT. IT IS THE RESPONSIBILITY OF THE CONTRACTOR TO COORDINATE WITH UTILITY AND PROVIDE EQUIPMENT AS NECESSARY AT NO COST TO THE OWNER.

HENSLEY & GOERLING
CONSULTING ENGINEERS, LLC
PO Box 2503
Summerville, SC 29485
HGCEng.com
843-696-2869 - JDG
843-437-1390 - DWH

SOUTH CAROLINA CERTIFICATE OF AUTHORIZATION
HENSLEY AND GOERLING CONSULTING ENGINEERS, LLC
No. 5279

NOT FOR CONSTRUCTION

ALL DESIGN, DRAWINGS, AND SPECIFICATIONS SHOWN ARE PROPERTY OF HENSLEY & GOERLING CONSULTING ENGINEERS, LLC. ANY UNAUTHORIZED ATTEMPT TO REPRODUCE OR DUPLICATE IS SUBJECT TO LEGAL PROSECUTION. THESE PLANS SHALL NOT BE USED FOR CONSTRUCTION PURPOSES WITHOUT THE WRITTEN APPROVAL OF HENSLEY & GOERLING CONSULTING ENGINEERS, LLC.

PROJECT TITLE: WESTIN RESORT HILTON HEAD

LOCATION: HILTON HEAD ISLAND, SOUTH CAROLINA

SHEET NAME: ELECTRICAL - LEGENDS, ABBREVIATIONS, AND NOTES

#	SUBMISSION / REVISION	DATE
X	PROGRESS SET	09/06/2016

DRAWN BY:	DWH
CHECKED BY:	DWH
DATE:	AUGUST 4, 2016
PROJECT # :	16-144

E000 SHEET NO.

GENERAL DRAWING NOTES

A. COORDINATE EXACT LOCATIONS AND MOUNTING HEIGHTS OF LIGHT FIXTURES AND DEVICES WITH OWNER/ARCHITECT PRIOR TO INSTALLATION.

GENERAL DEMOLITION DRAWING NOTES

A. CONTRACTOR SHALL DEMOLISH ALL EXISTING ELECTRICAL INCLUDING LIGHT FIXTURES, WIRING DEVICES, RACEWAYS, CONDUCTORS AND ETC BACK TO EXISTING PANELS. REFER TO ARCHITECTURAL DEMOLITION PLANS FOR DETAILS.

NEW WORK DRAWING NOTES (#)

1. PROVIDE OUTDOOR REMOTE EMERGENCY EGRESS LIGHTING.

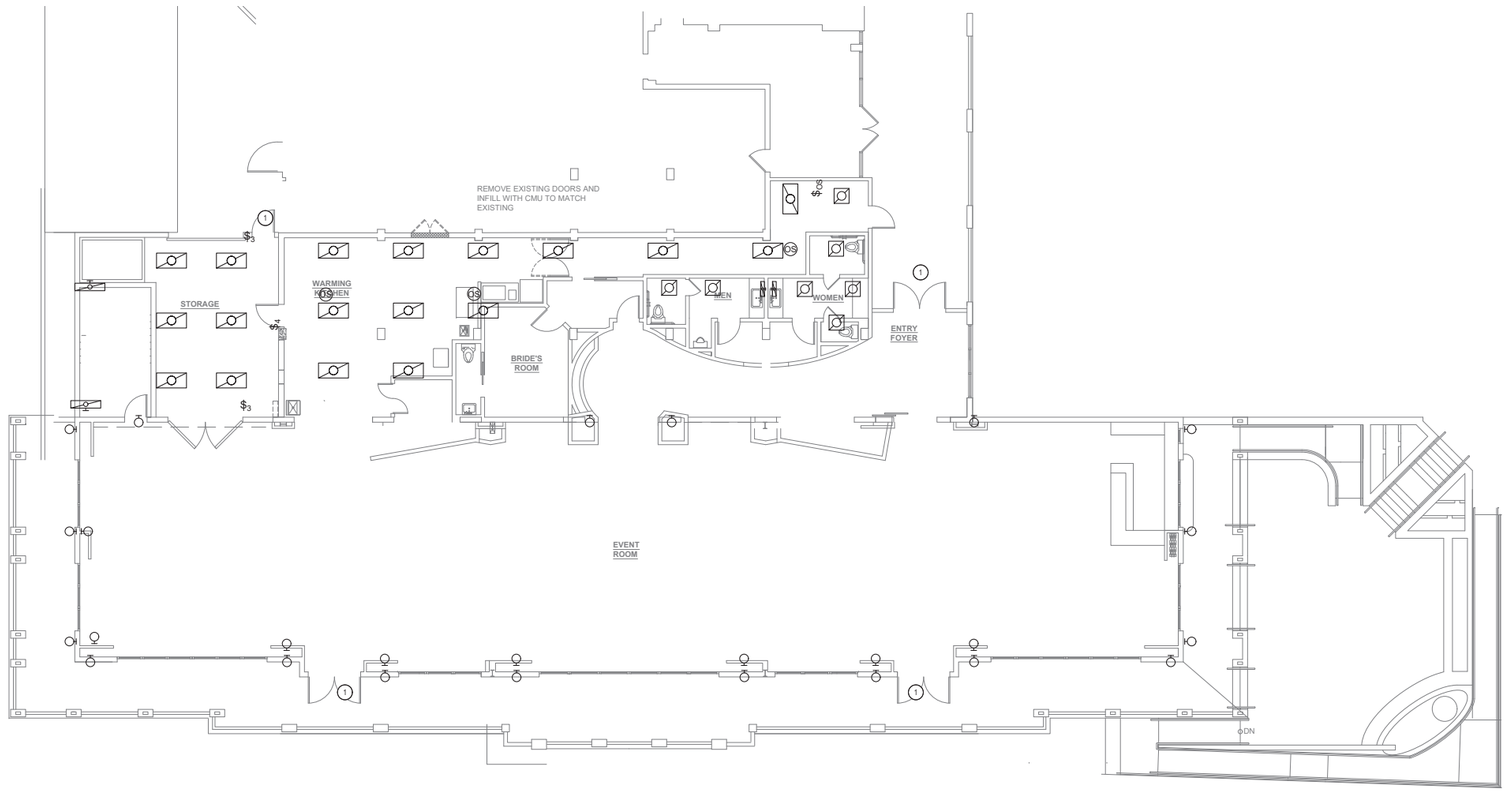

F1 ELECTRICAL - LIGHITNG PLAN
1/8" = 1'-0"

HENSLEY & GOERLING
CONSULTING ENGINEERS, LLC
PO Box 2562
Summerville, SC 29485
HGEng.com
843-496-2869 - ZDC
843-871-1298 - DWH

SOUTH CAROLINA
HENSLEY AND GOERLING CONSULTING ENGINEERS, LLC
No. 5279
CERTIFICATE OF AUTHORIZATION

NOT FOR CONSTRUCTION

ALL DESIGN, DRAWINGS, AND SPECIFICATIONS SHOWN ARE PROPERTY OF HENSLEY & GOERLING CONSULTING ENGINEERS, LLC. ANY UNAUTHORIZED ATTEMPT TO REPRODUCE OR DUPLICATE IS SUBJECT TO LEGAL PROSECUTION. THESE PLANS ARE NOT TO BE USED FOR CONSTRUCTION PURPOSES WITHOUT THE WRITTEN APPROVAL OF HENSLEY & GOERLING CONSULTING ENGINEERS, LLC.

PROJECT TITLE:
WESTIN RESORT HILTON HEAD
LOCATION:
HILTON HEAD ISLAND, SOUTH CAROLINA

SHEET NAME:
ELECTRICAL - LIGHTING PLAN

	SUBMISSION / REVISION	DATE
X	PROGRESS SET	08/08/2016

DRAWN BY:	DWH
CHECKED BY:	DWH
DATE:	AUGUST 4, 2016
PROJECT # :	16-144

E101
SHEET NO.

GENERAL DRAWING NOTES

A. COORDINATE EXACT LOCATIONS AND MOUNTING HEIGHTS OF ALL DEVICES WITH OWNER/ARCHITECT PRIOR TO INSTALLATION

GENERAL DEMOLITION DRAWING NOTES

A. CONTRACTOR SHALL DEMOLISH ALL EXISTING ELECTRICAL INCLUDING LIGHT FIXTURES, WIRING DEVICES, RACEWAYS, CONDUCTORS AND ETC BACK TO EXISTING PANELS. REFER TO ARCHITECTURAL DEMOLITION PLANS FOR DETAILS.

NEW WORK DRAWING NOTES (#)

1. PROVIDE 100A,120/208V,3PHASE AND 100A,120/208V,3PHASE CAMLOCK PANEL WITH BLACK, RED, BLUE, WHITE AND GREEN CONNECTIONS.

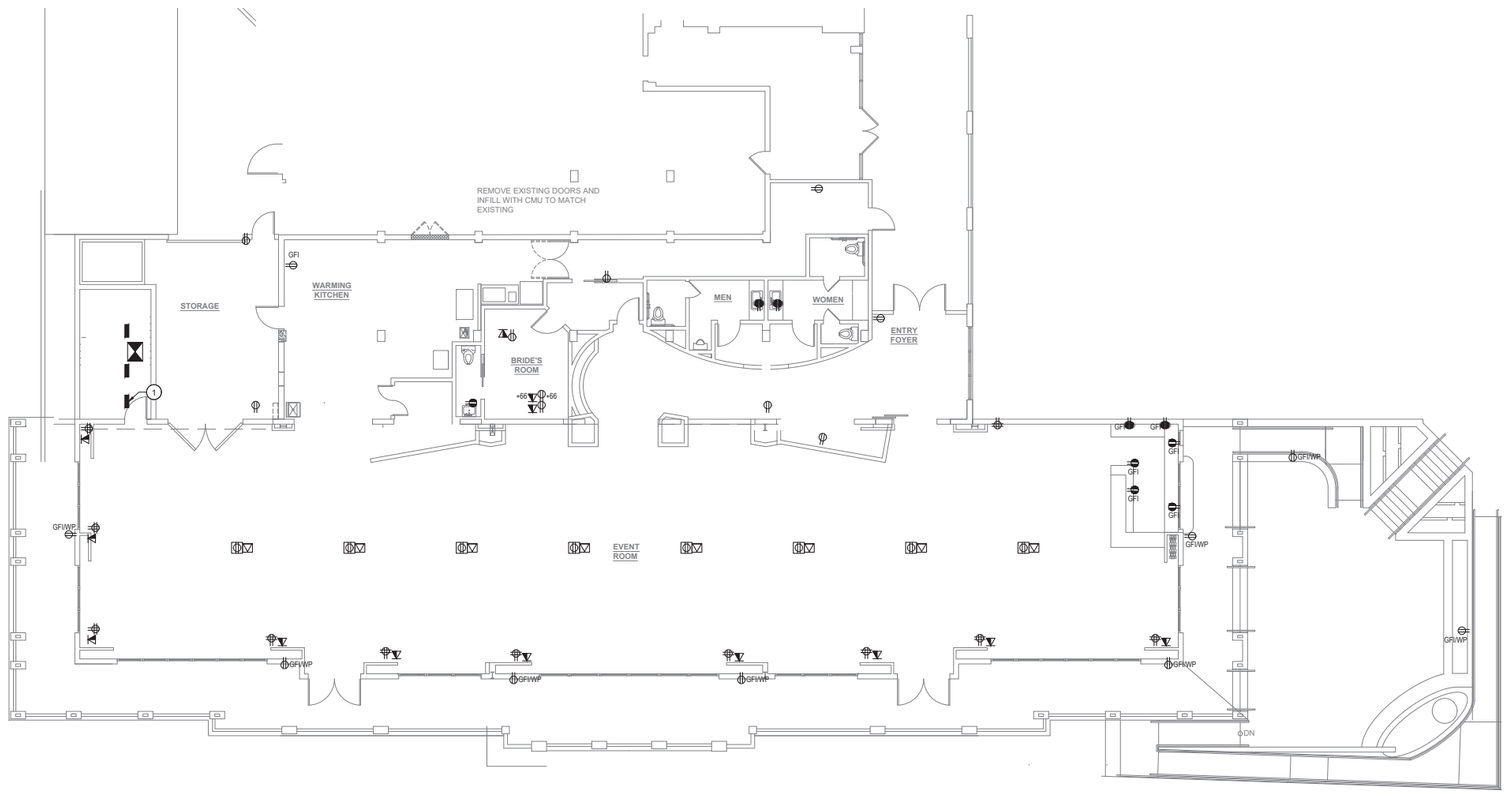

F1 ELECTRICAL - POWER PLAN
1/8" = 1'-0"

HENSLEY & GOERLING
CONSULTING ENGINEERS, LLC
PO Box 2562
Summerville, SC 29485
HG-E.Eng.com
843-496-2869 - JDC
843-47-1298 - DWH

SOUTH CAROLINA
HENSLEY AND GOERLING CONSULTING ENGINEERS, LLC
No. 5279
CERTIFICATE OF AUTHORIZATION

NOT FOR CONSTRUCTION

ALL DESIGN, DRAWINGS, AND SPECIFICATIONS SHOWN ARE PROPERTY OF HENSLEY & GOERLING CONSULTING ENGINEERS, LLC. ANY UNAUTHORIZED ATTEMPT TO REPRODUCE OR DUPLICATE IS SUBJECT TO LEGAL PROSECUTION. THESE PLANS ARE NOT TO BE USED FOR CONSTRUCTION PURPOSES WITHOUT THE WRITTEN APPROVAL OF HENSLEY & GOERLING CONSULTING ENGINEERS, LLC.

PROJECT TITLE:
WESTIN RESORT HILTON HEAD

LOCATION:
HILTON HEAD ISLAND, SOUTH CAROLINA

SHEET NAME:
ELECTRICAL - POWER PLAN

	SUBMISSION / REVISION	DATE
X	PROGRESS SET	06/06/2016

DRAWN BY:	DWH
CHECKED BY:	DWH
DATE:	AUGUST 4, 2016
PROJECT # :	16-144

E201
SHEET NO.

NEW WORK DRAWING NOTES (#)

1. XX

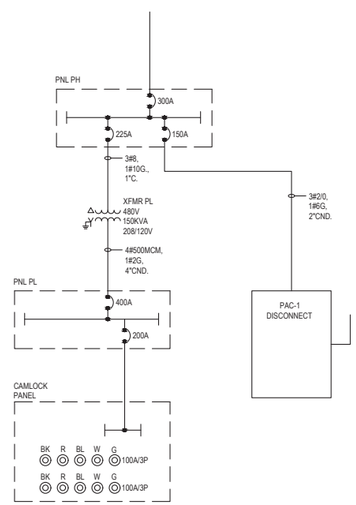

F1 ELECTRICAL SINGLE LINE DIAGRAM
NTS

HENSLEY & GOERLING
CONSULTING ENGINEERS, LLC
PO Box 2582
Summerville, SC 29485
HGEng.com
843-696-2869 - JDC
843-873-1298 - DWH

SOUTH CAROLINA
HENSLEY AND GOERLING CONSULTING ENGINEERS, LLC
No. 5279
CERTIFICATE OF AUTHORIZATION

NOT FOR CONSTRUCTION

ALL DESIGN, DRAWINGS, AND SPECIFICATIONS SHOWN ARE PROPERTY OF HENSLEY & GOERLING CONSULTING ENGINEERS, LLC. ANY UNAUTHORIZED ATTEMPT TO REPRODUCE OR DUPLICATE IS SUBJECT TO LEGAL ACTION. DRAWINGS AND SPECIFICATIONS TO BE USED FOR CONSTRUCTION PURPOSES WITHOUT THE WRITTEN APPROVAL OF HENSLEY & GOERLING CONSULTING ENGINEERS, LLC.

PROJECT TITLE:
WESTIN RESORT HILTON HEAD

LOCATION:
HILTON HEAD ISLAND, SOUTH CAROLINA

SHEET NAME:
ELECTRICAL SINGLE LINE DIAGRAM

△	SUBMISSION / REVISION	DATE
X	PROGRESS SET	08/06/2016

DRAWN BY:	DWH
CHECKED BY:	DWH
DATE:	AUGUST 4, 2016
PROJECT # :	16-144

E601
SHEET NO.

DESIGN TEAM/DRB COMMENT SHEET

The comments below are staff recommendations to the Design Review Board (DRB) and do NOT constitute DRB approval or denial.

PROJECT NAME: Westin Hotel – Pavilion Redevelopment – NEW DEVELOPMENT FINAL

DRB#: DRB-001766-2016

DATE: September 27, 2016

RECOMMENDATION: Approval ☐ Approval with Conditions ☒ Denial ☐

RECOMMENDED CONDITIONS:

1. Provide color and material samples.
2. Provide additional information regarding light fixture and ensure compliance with the LMO and turtle-friendly lighting requirements.
3. Provide details for fire pit and fountain identified on landscape plan.
4. Per previous review – provide additional details on storage building, more images of existing building compared to proposed building, and letter regarding deck encroachment.

ARCHITECTURAL DESIGN

DESIGN GUIDE/LMO CRITERIA	Complies Yes	No	Not Applicable	Comments or Conditions
Structure is designed to be appropriate to the neighborhood	☒	☐	☐	
Promotes pedestrian scale and circulation	☒	☐	☐	
Design is unobtrusive and set into the natural environment	☐	☐	☒	
Utilizes natural materials and colors	☒	☐	☐	Colors intended to match/complement existing structure
Avoids distinctive vernacular styles	☒	☐	☐	
Design is appropriate for its use	☒	☐	☐	

All facades are have equal design characteristics	☒	☐	☐	
Avoids monotonous planes or unrelieved repetition	☒	☐	☐	
Has a strong roof form with enough variety to provide visual interest	☒	☐	☐	
Minimum roof pitch of 6/12	☐	☒	☐	4/12 but appropriate for building.
Overhangs are sufficient for the façade height.	☒	☐	☐	
Forms an details are sufficient to reduce the mass of the structure	☒	☐	☐	
Human scale is achieved by the use of proper proportions and architectural elements	☒	☐	☐	
Utilizes a variety of materials, textures and colors	☒	☐	☐	
Incorporates wood or wood simulating materials	☒	☐	☐	
Windows are in proportion to the facade	☒	☐	☐	
Details are clean, simple and appropriate while avoiding excessive ornamentation	☒	☐	☐	
Utilities and equipment are concealed from view	☒	☐	☐	
Decorative lighting is limited and low wattage and adds to the visual character	☐	☐	☐	Wattage not provided; refer to LMO Section 16-5-108 – light source shall be completely concealed within an opaque housing. Turtle friendly lighting will be required.
Accessory elements are design to coordinate with the primary structure	☒	☐	☐	

LANDSCAPE DESIGN

DESIGN GUIDE/LMO CRITERIA	Complies Yes	No	Not Applicable	Comments or Conditions
Treats the Landscape as a major element of the project	☒	☐	☐	
Provides Landscaping of a scope and size that is in proportion to the scale of the development	☒	☐	☐	
Landscape is designed so that it may be maintained in its natural shape and size	☒	☐	☐	
Preserves a variety of existing native trees and shrubs	☒	☐	☐	
Provides for a harmonious setting for the site's structures, parking areas or other construction	☒	☐	☐	
Location of existing trees and new trees provides street buffers, mitigation for parking lots, and an architectural complement that visually mitigates between parking lots and building(s)	☒	☐	☐	
Shrubs are selected to complement the natural setting,	☒	☐	☐	

provide visual interest and screen less desirable elements of the project				
A variety of species is selected for texture and color	☒	☐	☐	
Provides overall order and continuity of the Landscape plan	☒	☐	☐	
Native plants or plants that have historically been prevalent on the Island are utilized	☒	☐	☐	
A variety of sizes is selected to create a "layered" appearance for visual interest and a sense of depth	☒	☐	☐	
The location of existing mature trees is taken into account in placement of shrubs so as not to damage tree roots	☒	☐	☐	
Proper spacing and location for plants to reach their mature size and natural shape while avoiding excessive or unnatural pruning	☒	☐	☐	
Proposed groundcovers are evergreen species with low maintenance needs	☒	☐	☐	
Large grassed lawn areas encompassing a major portion of the site are avoided	☒	☐	☐	
The adjacent development is taken into account in determining the most appropriate buffer so as not to depart too dramatically from the neighborhood	☒	☐	☐	
Ornamentals and Annuals are limited to entrances and other focal points	☒	☐	☐	

NATURAL RESOURCE PROTECTION

DESIGN GUIDE/LMO CRITERIA	Complies Yes	No	Not Applicable	Comments or Conditions
An effort has been made to preserve existing trees and under story plants	☒	☐	☐	
Supplemental and replacement trees meet LMO requirements for size, species and number	☐	☐	☐	TBD
Wetlands if present are avoided and the required buffers are maintained	☒	☐	☐	
Sand dunes if present are not disturbed	☒	☐	☐	

MISC COMMENTS/QUESTIONS